9. SAMPLE PROBLEMS

9.1. Overview

There are four sample problems:

- Problem 1: Vinyl Fixed Window page 9-2
- Problem 2: Aluminum Horizontal Sliding Window page 9-16
- Problem 3: Skylight page 9-50
- Problem 4: Door page 9-59

These sample problems may contain boundary conditions, frame cavity conditions and modeling techniques that do not conform to the NFRC modeling rules. If this is the case, the NFRC modeling rules always take precedence over what is shown in these example problems. Also, the results shown in these examples may not correspond exactly to results obtained with the WINDOW and THERM programs.

Please note that some of the drawings provided with these sample problems are proprietary. Therefore, they shall not be used by anyone for any purpose other than the enclosed sample problems without the prior written consent of NFRC.

9.2 Problem 1: Vinyl Fixed Window

For this fixed vinyl window, calculate the U-factor, SHGC, and VT values.

9.2.1. Description

Window Type	Fixed picture window.
Overall Size	Width = 1200 mm; Height = 1500 mm
Frame Material	PVC frame and stop, with a wall thickness of 3.175 mm (0.125″). The same geometry can be used for the head, jambs and sill.
Glazing System	Double glazing, 19.05 mm (0.750″) overall I.G. thickness. The outboard lite is double-strength clear glass, 3.277 mm (0.129″) thick. The inboard lite is double-strength clear glass with a PPG Sungate100 Low-E coating on surface three. The glazing cavity is air filled, 12.5 mm (0.492″) thick.
Spacer Type	Intercept spacer with PIB primary seal and hot-melt butyl secondary seal.
Glazing Method	Foam rubber tape, 3.175 mm (0.125″) thick.
Dividers	Aluminum grille pattern, painted white. The grille pattern for the window is three by four, and is between the glass.
Cross Sections	See Section 9.2.7 for drawings of this product.

9.2.2. Glazing Matrix

The window is offered by the manufacturer both with and without dividers. The drawings indicate that there is less than 3.0 mm (0.118″) between the glass and the divider, so the glazing matrix must include both a case with and without dividers.

9.2.3. Center-of-glazing Modeling (WINDOW)

Model the glazing system in WINDOW with double strength clear glass, a 12.5 mm (0.492") air space (air filled), and Sungate100 Low-E.

The figure below shows the WINDOW Glazing System Library for this glazing system.

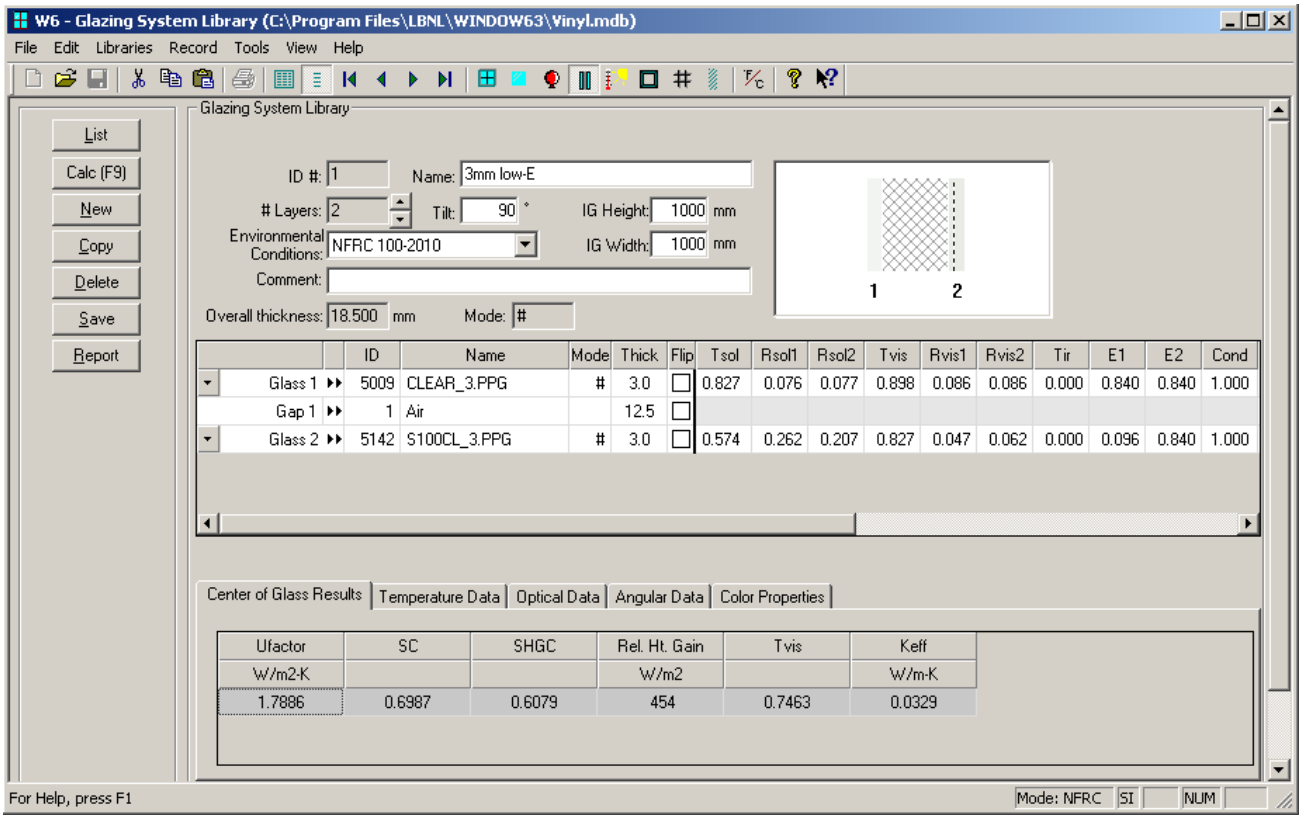

Figure 9-1. WINDOW Glazing System Library for the vinyl window.

The results for the center-of-glazing U-factor are shown in the following table:

Table 9-1. Center-of-glazing U-factor results from WINDOW.

		Center-of-Glazing U-Factor	
	Glazing Options 19.05 mm (0.75") overall thickness	**W/m^2-°C**	**(Btu/hr-ft^2-°F)**
1	Clear (3 mm), Air, Low-E (3 mm)	1.7886	0.3150

This glazing system will be used in THERM to calculate the edge-of-glazing and frame U-factors, and also in WINDOW to calculate the overall product U-factor.

9.2.4. Edge-of-glazing and Frame Modeling for U-Factor (THERM)

Because this is a fixed window where the head, sill and jambs have the same geometry, the frame and stop portions of the cross sections created in THERM will be the same. However, due to the ISO 15099 modeling assumptions for gravity vectors and Condensation Resistance modeling, it is necessary to create a unique cross section for each component type to reflect the proper orientation of the glazing system and gravity vector.

The table below shows the files that are associated with this example.

Table 9-2. Files associated with the vinyl window example.

Cross Section	DXF Filename	THERM Filename
Sill	Vinyl–Frame.dxf	Vinyl-Sill.thm
Head	Vinyl–Frame.dxf	Vinyl-Head.thm
Jamb	Vinyl–Frame.dxf	Vinyl-Jamb.thm
Divider		Vinyl-Div.thm

The table below shows the resulting U-factors for the vinyl frame and divider cross sections.

Table 9-3. THERM results for the vinyl window cross sections.

	Frame U-Factor		Edge U-Factor	
Cross Section	W/m^2-°C	$Btu/hr\text{-}ft^2$-°F	W/m^2-°C	$Btu/hr\text{-}ft^2$-°F
Sill	1.5988	0.2816	2.1163	0.3727
Head	1.6037	0.2824	2.1151	0.3725
Jamb	1.6498	0.3182	2.1176	0.3706
Divider	2.6050	0.4593	1.9986	0.3521

Figures 9-2 through 9-5 show the THERM cross sections and U-factor results for this window.

Sill

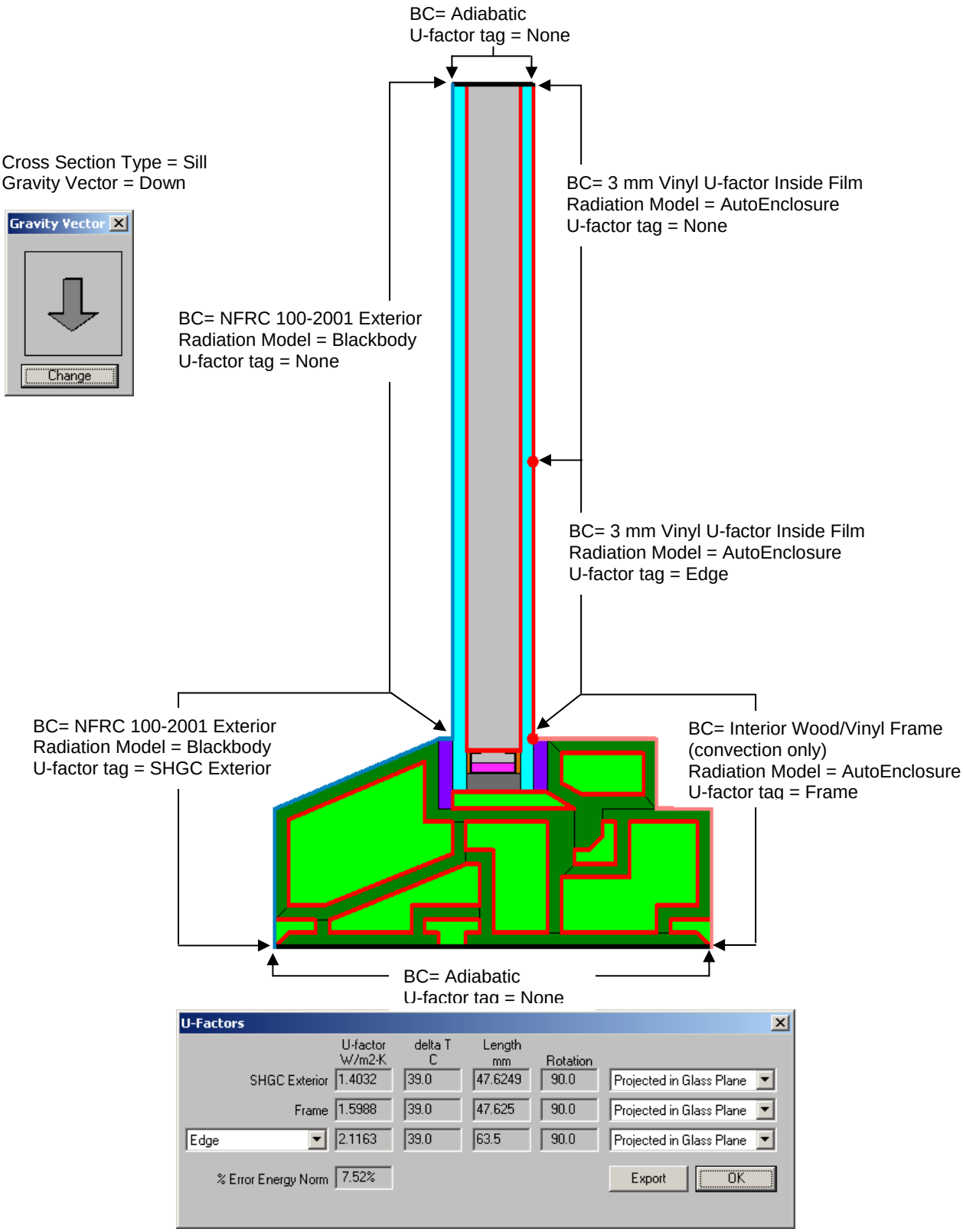

Figure 9-2. THERM cross section and U-factor results for the sill cross section.

Jamb

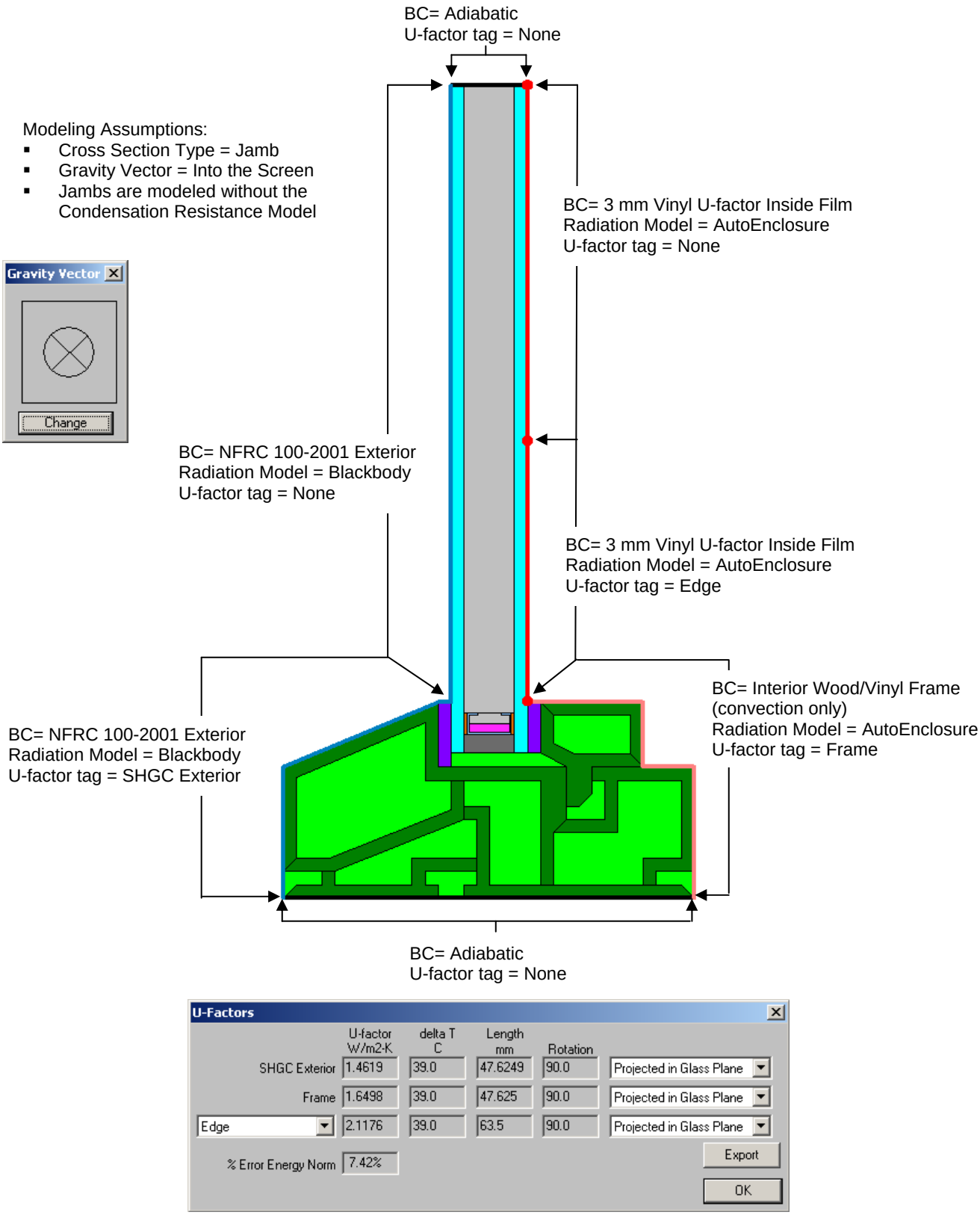

Figure 9-3. THERM cross section and U-factor results for the jamb cross section.

Head

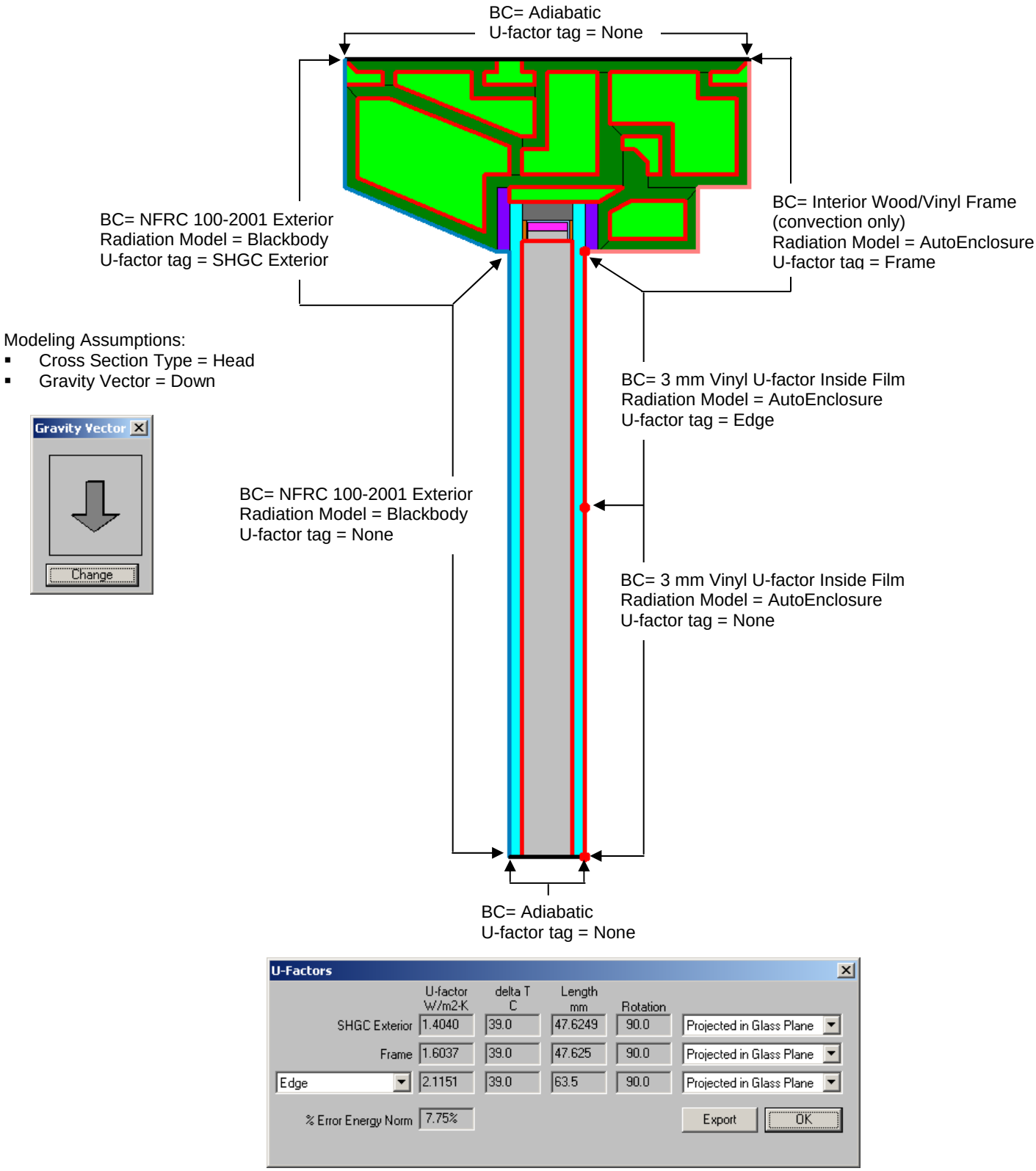

Figure 9-4. THERM cross section and U-factor results for the head cross section.

Divider

- Cross Section Type = Vertical Divider
- (model both vertical and horizontal dividers as Vertical)
- Do not use the CR model with a Vertical Divider cross section.
- Gravity Vector = Into the Screen
- It is not necessary to apply the SHGC Exterior U-factor tag in this case because the interior projected frame dimension and the exterior wetted length are the same (but it should be added for consistency).

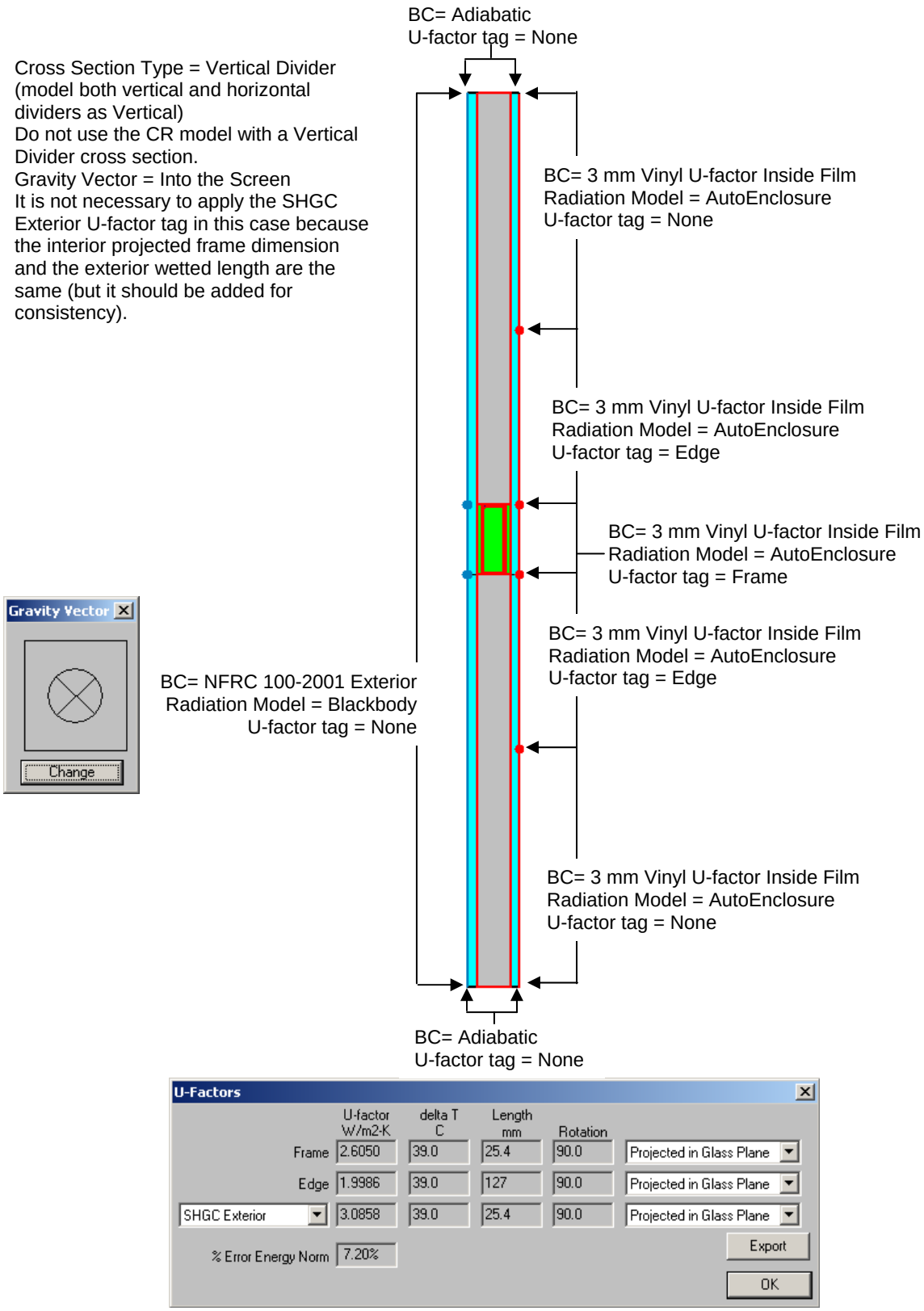

Figure 9-5. THERM cross section and U-factor results for the divider cross section.

9.2.5. Total Product U-Factor

In WINDOW, import the THERM cross sections into the Frame Library.

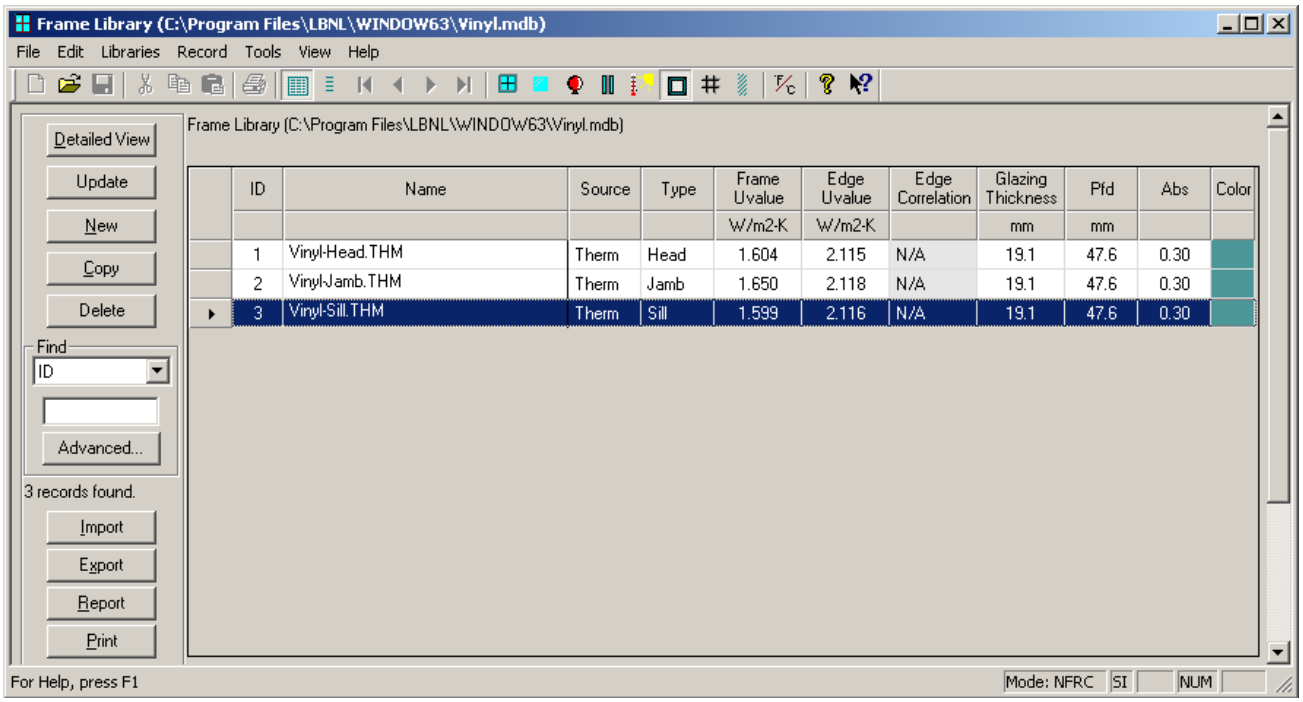

ID	Name	Source	Type	Frame Uvalue	Edge Uvalue	Edge Correlation	Glazing Thickness	Pfd	Abs	Color
				W/m2-K	W/m2-K		mm	mm		
1	Vinyl-Head.THM	Therm	Head	1.604	2.115	N/A	19.1	47.6	0.30	
2	Vinyl-Jamb.THM	Therm	Jamb	1.650	2.118	N/A	19.1	47.6	0.30	
3	Vinyl-Sill.THM	Therm	Sill	1.599	2.116	N/A	19.1	47.6	0.30	

Figure 9-6. THERM files imported into the Frame Library.

In WINDOW, two records are created in the Window Library for the U-factor calculation – one without dividers and one with the manufacturer supplied dividers, as shown in the figure below.

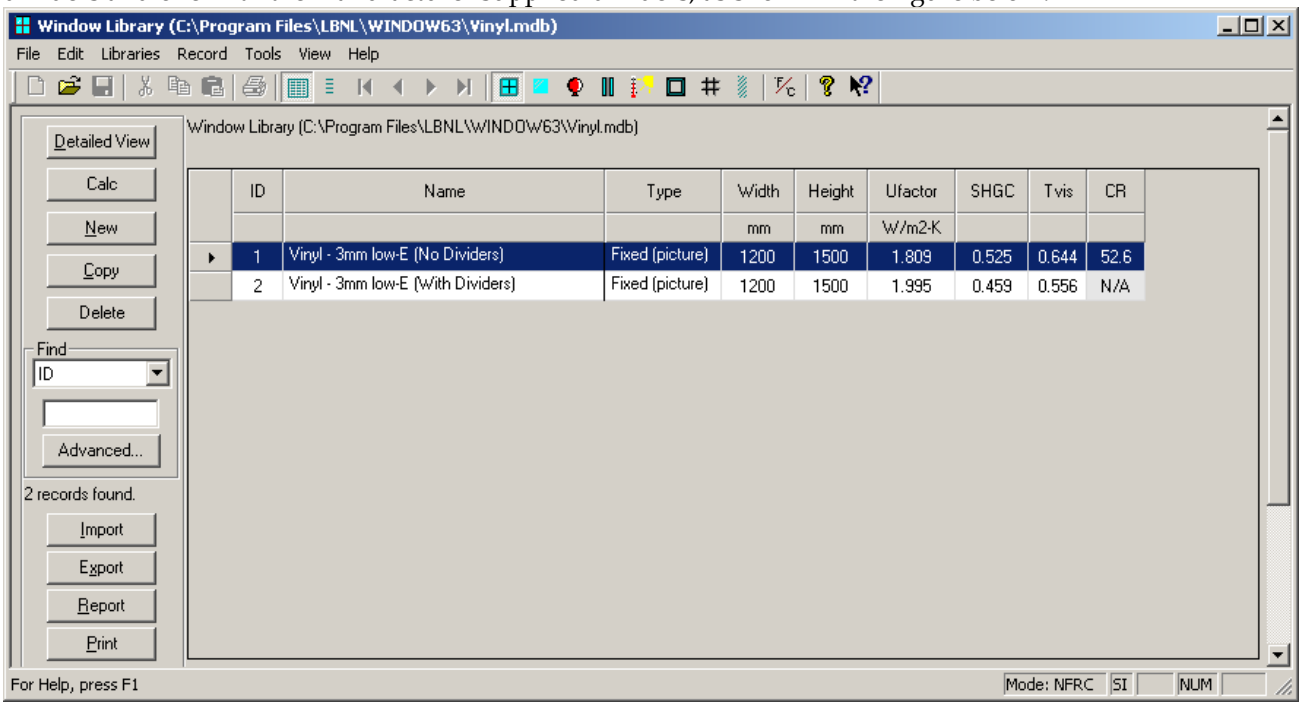

ID	Name	Type	Width	Height	Ufactor	SHGC	Tvis	CR
			mm	mm	W/m2-K			
1	Vinyl - 3mm low-E (No Dividers)	Fixed (picture)	1200	1500	1.809	0.525	0.644	52.6
2	Vinyl - 3mm low-E (With Dividers)	Fixed (picture)	1200	1500	1.995	0.459	0.556	N/A

Figure 9-7. Window Library records for the product with and without dividers for the U-factor calculation.

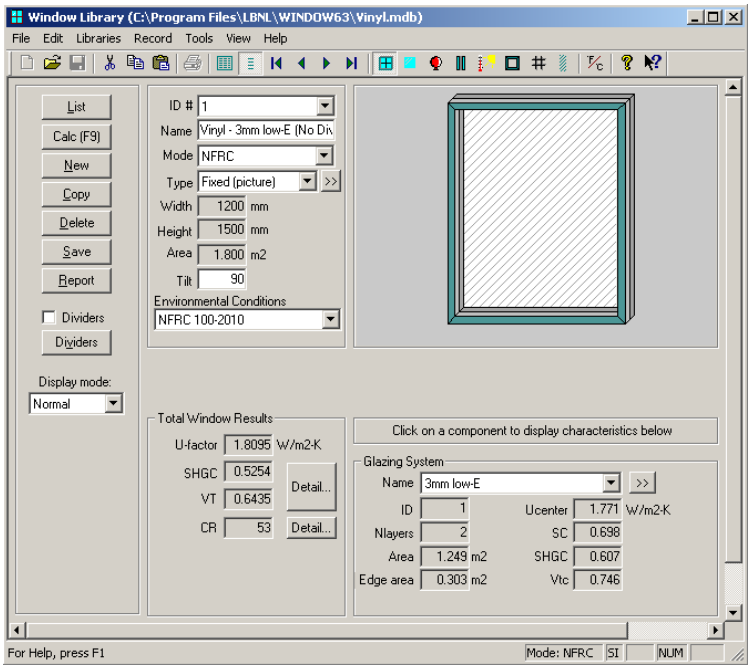

Figure 9-8. WINDOW total product U-factor calculation without dividers.

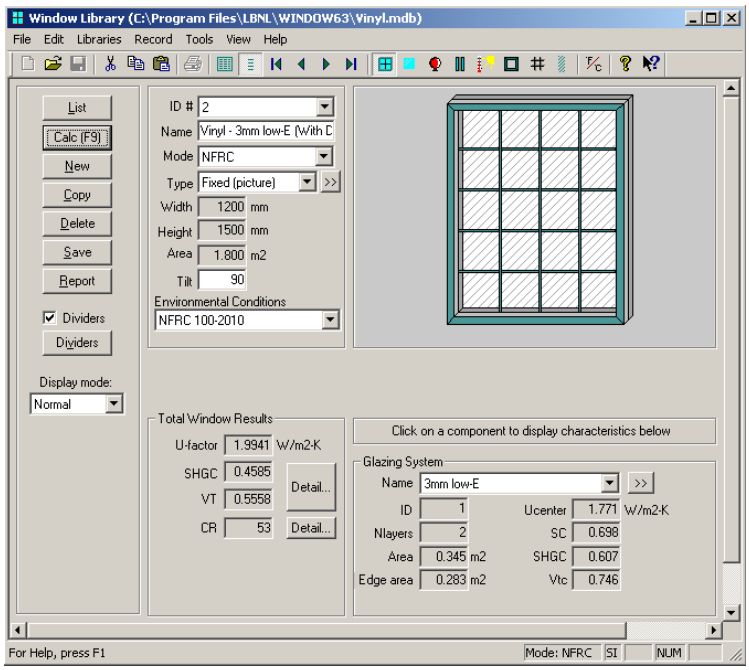

Figure 9-9. WINDOW total product U-factor calculation with dividers.

The following table shows the overall product U-factor from WINDOW, both with and without dividers.

Table 9-4. Total product U-factors.

Glazing Options19.05 mm (0.75”) overall thickness		**Total Product U-Factor**	
		W/m^2-°C	**Btu/hr-ft^2-°F**
1	Clear, Air, Low-E (without dividers)	1.8095	0.3187
2	Clear, Air, Low-E (with dividers)	1.9941	0.3512

9.2.6. Individual Product SHGC and VT using SHGC 0 & 1 and VT 0 & 1

The methodology for determining the Solar Heat Gain Coefficient (SHGC) and Visible Transmittance (VT) for products is outlined in NFRC 200 using values of $SHGC_0$, $SHGC_1$, VT_0 and VT_1. A detailed explanation of how to apply that methodology in WINDOW is presented in Section 7.4.1 of this manual. These values are calculated in WINDOW for the best glazing option modeled with the highest frame and edge U-factor frame, as outlined in NFRC 200, Section 4.2.3 (A). The values calculated from that one case are then used to calculate the SHGC and VT for any other glazing options using Equations 4-1 and 4-2 in NFRC 200. Do not use the $SHGC_0$, $SHGC_1$, VT_0 and VT_1 from WINDOW for every glazing option – just for the best glazing option.

Using this procedure, display the results for the $SHGC_0$, $SHGC_1$, VT_0 and VT_1 for the best glazing option (Clear, Air, Low-E), by clicking on the **Detail** button on the **Window Library Detailed View** screen, as shown in the figure below. The **SHGC and VT detail** dialog box will show the SHGC and VT values for the following three cases for this glazing option:

- No Dividers
- Dividers ≤ 25.4 mm (modeled as 19.5 mm)
- Dividers > 25.4 mm (modeled as 38.1 mm)

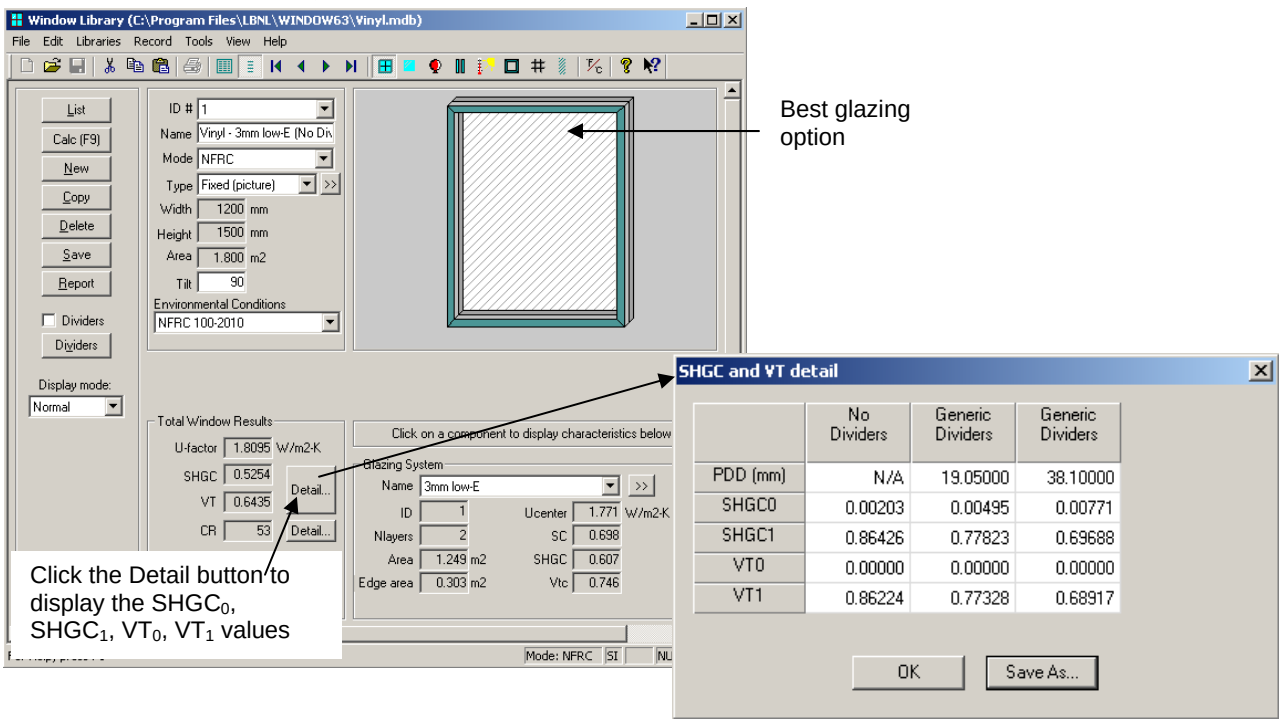

Figure 9-10. Window Library SHGC and VT values for the best glazing option, accessed from the Detail button.

Table 9-5. $SHGC_0$, $SHGC_1$, VT_0 and VT_1 data for the best glazing option in this product line (Clear, Air, Low-E).

	No Dividers	**Dividers ≤ 25.4 mm, modeled at 19.5 mm (≤ 1.0", modeled at 0.75")**	**Dividers > 25.4 mm, modeled at 38.1 mm (> 1.5", modeled at 1.5")**
$SHGC_0$	0.00203	0.00495	0.00771
$SHGC_1$	0.86426	0.77823	0.69688
VT_0	0.0	0.0	0.0
VT1	0.86224	0.77328	0.68917

SHGC Calculation Using Equation 4-1 from NFRC 200

Equation 4-1 from NFRC 200 is used to calculate the whole product SHGC from the $SHGC_0$, $SHGC_1$, and $SHGC_C$:

$$SHGC = SHGC_0 + SHGC_C\ (SHGC_1 - SHGC_0)$$

Where:

$SHGC_C$ =	center-of-glazing SHGC (calculated in the Glazing System Library of WINDOW for the best glazing option)
$SHGC_0$ =	total product SHGC values for a center-of-glazing SHGC of 0.0 (calculated in the Window Library of WINDOW for the best glazing option)
$SHGC_1$ =	total product SHGC values for a center-of-glazing SHGC of 1.0 (calculated in the Window Library of WINDOW for the best glazing option)
SHGC =	total product SHGC (calculated using Equation 4-1)

The SHGC data from Table 9-5 is used with Equation 4-1 to determine total product SHGC as follows:

Without Dividers:

SHGC = 0.00203+ 0.6079 (0.86426– 0.00203)
= 0.5262

With Dividers < 1″ (25.4mm) – modeled at 0.75″:

SHGC = 0.00495 + 0.6067 (0.77823 – 0.00495)
= 0.4741

With Dividers ≥ 1″ (25.4mm) modeled at 0.75″:

SHGC =0.00771+ 0.6067 (0.69688– 0.00771)
= 0.4258

Table 9-6. Total product SHGC for the best glazing option (Clear, Air, Low-E).

SHGC			
Glazing Option	**No Dividers**	**Dividers ≤ 25.4 mm, modeled at 19.5 mm (≤ 1.0”, modeled at 0.75”)**	**Dividers > 25.4 mm, modeled at 38.1 mm (> 1.5”, modeled at 1.5”)**
Clear, Air, Low-E	0.5262	0.4741	0.4258

VT Calculation Using Equation 4-2 from NFRC 200

Equation 4-2 from NFRC 200 is used to calculate the whole product VT from the VT_0, VT_1, and VT_C:

$VT = VT_0 + VT_C (VT_1 - VT_0)$

Where:

VTC =	center-of-glazing VT (calculated in the Glazing System Library of WINDOW for the best glazing option as "Tvis")
VT0 =	total product VT values for a center-of-glazing VT of 0.0 (calculated in the Window Library of WINDOW for the best glazing option)
VT1 =	total product VT values for a center-of-glazing VT of 1.0 (calculated in the Window Library of WINDOW for the best glazing option)
VT =	total product VT (calculated using Equation 4-2)

The VT data from Table 9-5 is used with Equation 4-1 to determine total product VT as follows:

Without Dividers:

VT = 0.0 + 0.7463 (0.86224– 0.0)
= 0.6435

With Dividers < 1″ (25.4mm) – modeled at 0.75″:

VT = 0.0 + 0.7463 (0.77328– 0.0)
= 0.5771

With Dividers ≥ 1″ (25.4mm) modeled at 0.75″:

VT = 0.0 + 0.7463 (0.68917– 0.0)
= 0.5143

Table 9-7.. Total product VT for the best glazing option (Clear, Air, Low-E).

VT			
Glazing Option	**No Dividers**	**Dividers ≤ 25.4 mm, modeled at 19.5 mm (≤ 1.0", modeled at 0.75")**	**Dividers > 25.4 mm, modeled at 38.1 mm (> 1.5", modeled at 1.5")**
Clear, Air, Low-E	0.6435	0.5771	0.5143

9.2.7. Drawings Vinyl Fixed Window

The following pages contain detailed drawings for this window.

Head, Sill and Jamb

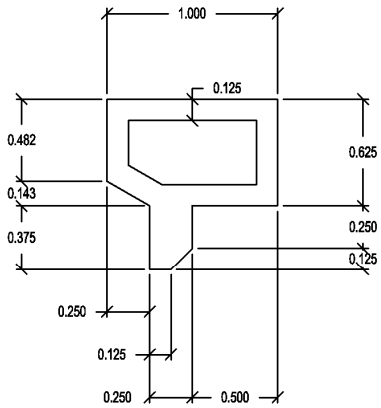

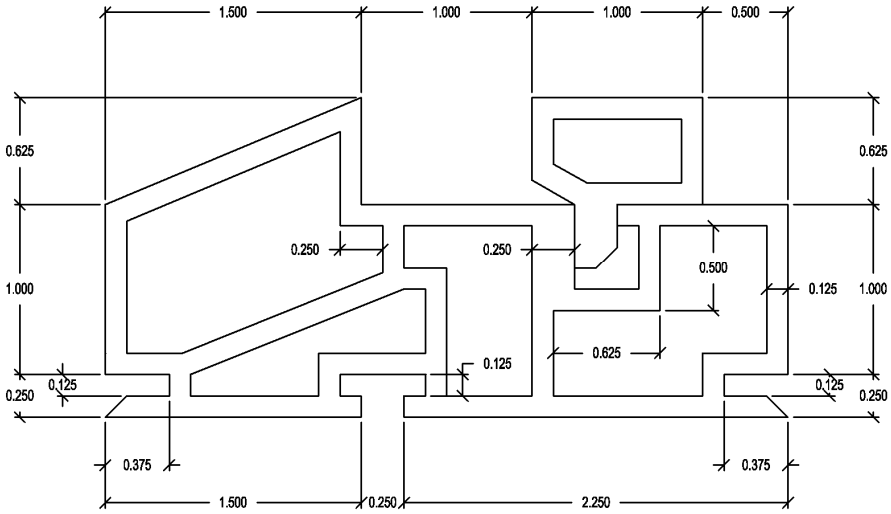

Figure 9-11. Dimensioned drawing for the frame and stop.

Spacer

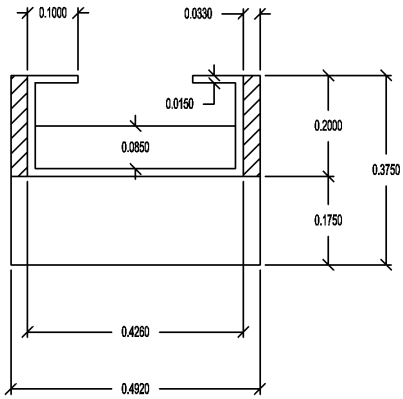

Figure 9-12. Dimensioned drawing for the spacer.

Divider

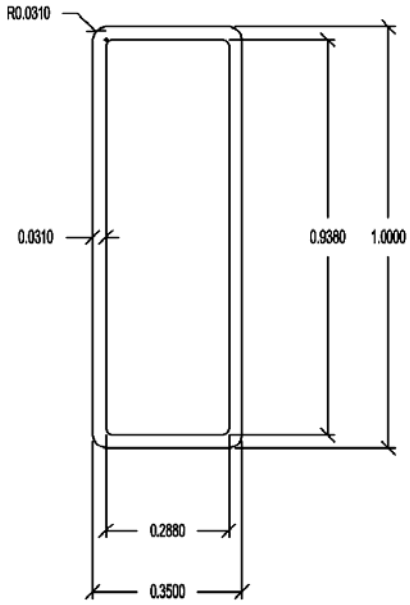

Figure 9-13. Dimensioned drawing for the divider.

9.3 Problem 2: Aluminum Horizontal Slider Window

For this aluminum horizontal slider window example, calculate the total product U-factor, SHGC, VT and the specialty products table.

9.3.1. Description

Window Type	Horizontal Slider
Overall Size	Width = 1500mm; Height = 1200mm
Frame Material	Aluminum painted white. Thermal breaks as indicated in the drawing assembly. The manufacturer indicated that the de-bridge width is 0.250" for all the cross sections. Thermal break material is poured in place polyurethane.
Spacer type	See drawings in Section 9.3.7.
Weather Strip	See drawings in Section 9.3.7.
Cross Sections	Section 9.3.7 contains the drawings for this example.
Dividers	Aluminum painted white. See drawing for dimensions. Manufacturer provides standard 12" on center or less horizontal and vertical grid pattern for his products.
Glazing System	Double glazing, 25.4 mm (1”) overall I.G. thickness. The manufacturer uses two different glass suppliers depending on the market availability and price factor. The manufacturer uses clear and Low-E coated glass from the same supplier. ▪ **Clear Glass**: from PPG or CIG with nominal thickness of 3 mm, 4 mm, 5 mm, and 6mm ▪ **Low-E Glass**: from PPG (Sungate100) or CIG (LoE 145) with nominal thickness of 3 mm, 4 mm, 5 mm, and 6mm
Spacer Type	Stainless steel spacer with PIB primary seal and silicone secondary seal.
Glazing Method	PVC U-channel.
Dividers	Aluminum grille pattern, painted white. See drawing in Section 9.3.7 for dimensions. The manufacturer provides standard 12” on center or less horizontal and vertical grid pattern for this product. Based on the drawings and the glazing cavity thickness, the dividers do not need to be modeled because the gap between the divider and the glass is greater than 3.0 mm (0.118”).
Cross Sections	See Section 9.3.7 for drawings of this product.

9.3.2. Glazing Matrix

The following table shows the glazing matrix that is to be simulated for this window. However, for this example, only Glazing Option 1 will be modeled using CIG glass.

Table 9-8. Matrix of glazing options for the aluminum horizontal slider.

	Glazing Options 25.4 mm (1.0”) overall thickness	**Grid Option**	**Manufacturer**
1	Clear (3mm), Argon (95%), Low-E (3mm)	Not modeled*	CIG
2	Clear (4mm), Argon (95%), Low-E (4mm)	Not modeled*	CIG
3	Clear (5mm), Argon (95%), Low-E (5mm)	Not modeled*	CIG
4	Clear (6mm), Argon (95%), Low-E (6mm)	Not modeled*	CIG
5	Clear (3mm), Argon (95%), Low-E (3mm)	Not modeled*	PPG
6	Clear (4mm), Argon (95%), Low-E (4mm)	Not modeled*	PPG
7	Clear (5mm), Argon (95%), Low-E (5mm)	Not modeled*	PPG
8	Clear (6mm), Argon (95%), Low-E (6mm)	Not modeled*	PPG

9.3.3. Center-of-glazing Modeling (WINDOW)

In WINDOW, create the glazing systems needed for the Glazing Matrix in Section 9.3.2. The figure below shows the record for Glazing Option 1 in the Glazing System Library.

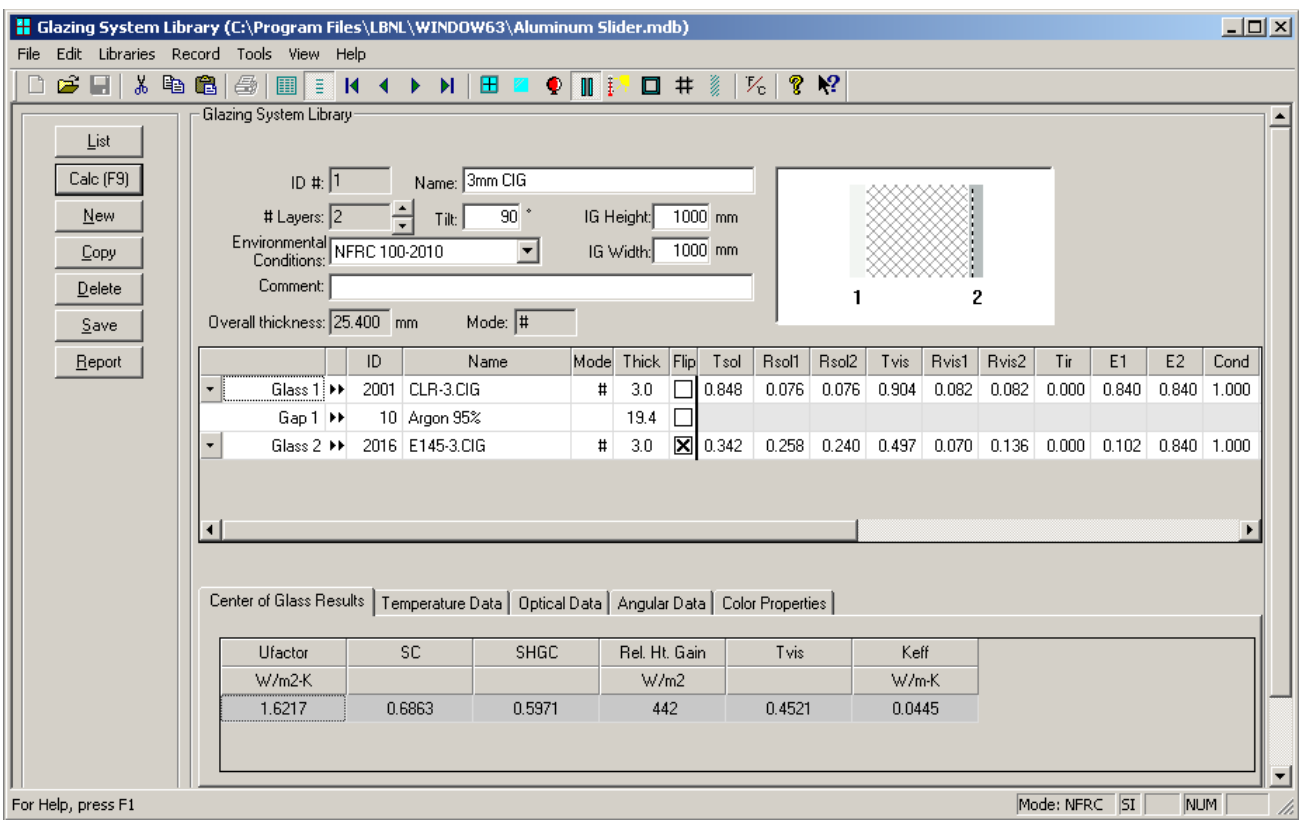

Figure 9-14. WINDOW Glazing System Library for Glazing Option 1 of the aluminum slider window.

The results for the center-of-glazing U-factor are shown in the following table:

Table 9-9. Center-of-glazing U-factor Results for Glazing Option 1 from WINDOW

Glazing Options 25.4 mm (1.0”) overall thickness		**Center-of-glazing U-Factor**	
		W/m^2-ºC	**BTU/hr-ft^2-ºF**
1	Clear (3mm), Argon (95%), Low-E (3mm)	1.6217	0.2856

These glazing systems will be used in THERM to calculate the frame and edge-of-glazing U-factors, and also in WINDOW to calculate the overall product U-factor.

9.3.4. Edge-of-glazing and Frame Modeling (THERM)

There are seven cross-sections that must be modeled for this product, listed in the table below.

Table 9-10. Cross sections and files associated with the aluminum horizontal slider example.

Cross Section	**DXF Filename**	**THERM Filename**
Sill Vent	Aluminum–Sill Vent.dxf	SV_01.thm
Sill Fixed	Aluminum–Sill Fixed.dxf	SF_01.thm
Head Vent	Aluminum–Head Vent.dxf	HV_01.thm
Head Fixed	Aluminum–Head Fixed.dxf	HF_01.thm
Jamb Vent	Aluminum–Jamb Vent.dxf	JV_01.thm
Jamb Fixed	Aluminum–Jamb Fixed.dxf	JF_01.thm
Meeting Rail	Aluminum–Meeting Rail.dxf	MR_01.thm

Note: The sample THERM files for this example were modeled with Glazing Option 1 only. Spacer geometry must be altered to accommodate the remaining glazing options.

Create THERM files for each cross section. The DXF files were not generated in a manner that would facilitate the use of the AutoConvert function in THERM, but the underlay can be used to trace the cross sections (see Chapter 5 “Drawing Cross Section Geometry” in the THERM User’s Manual).

Table 9-11 shows the resulting U-factors for the vinyl frame and divider cross sections.

Table 9-11. THERM results for the vinyl window cross sections.

	Frame U-Factor		**Edge U-Factor**	
Cross Section	**W/m^2-^{o}C**	**Btu/hr-ft^2-^{o}F**	**W/m^2-^{o}C**	**Btu/hr-ft^2-^{o}F**
Sill Vent	6.0714	1.0692	2.1744	0.3829
Sill Fixed	8.8507	1.5587	2.0555	0.3620
Head Vent	5.1152	0.9008	2.1201	0.3734
Head Fixed	7.1510	1.2594	2.0810	0.3665
Jamb Vent	5.3240	0.9376	2.1173	0.3729
Jamb Fixed	8.0264	1.4135	2.0708	0.3647
Meeting Rail	7.0598	1.2433	2.0251	0.3566

The figures on the following pages show THERM file cross sections and U-factor results for this window.

Sill Vent

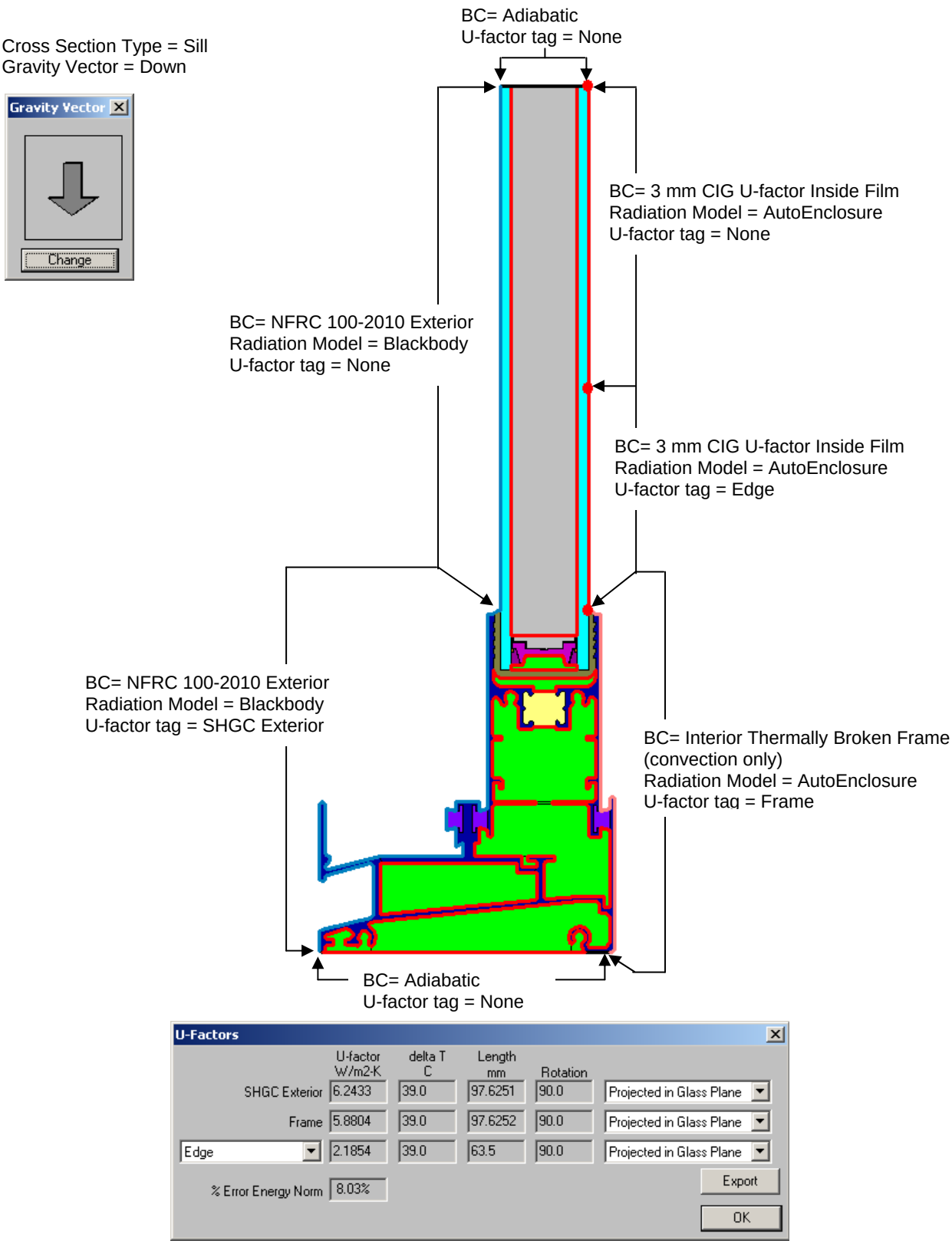

Figure 9-15. THERM cross section and U-factor results for sill vent cross section.

Sill Fixed

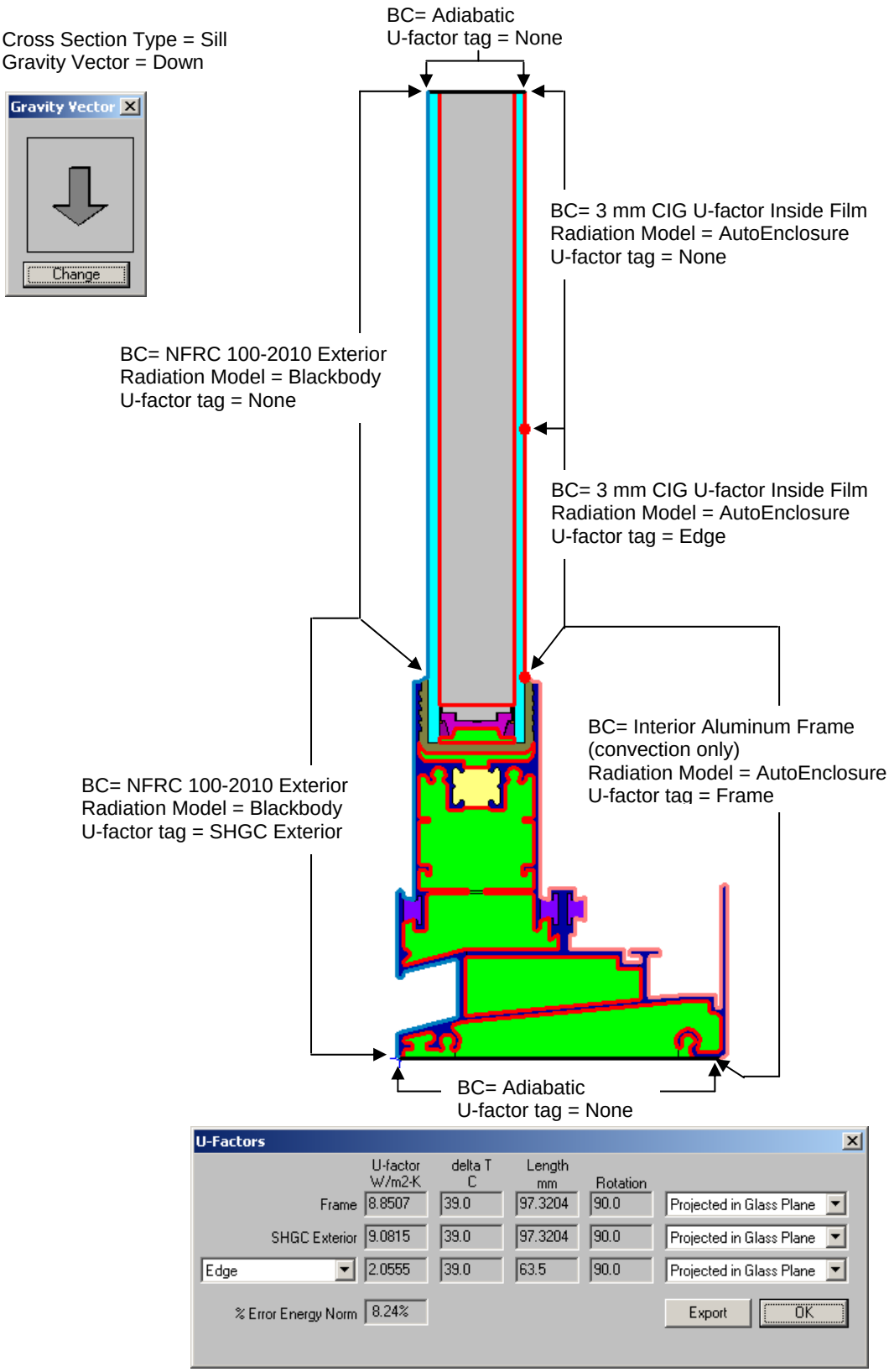

Figure 9-16. THERM cross section and U-factor results for the sill fixed cross section.

Jamb Vent

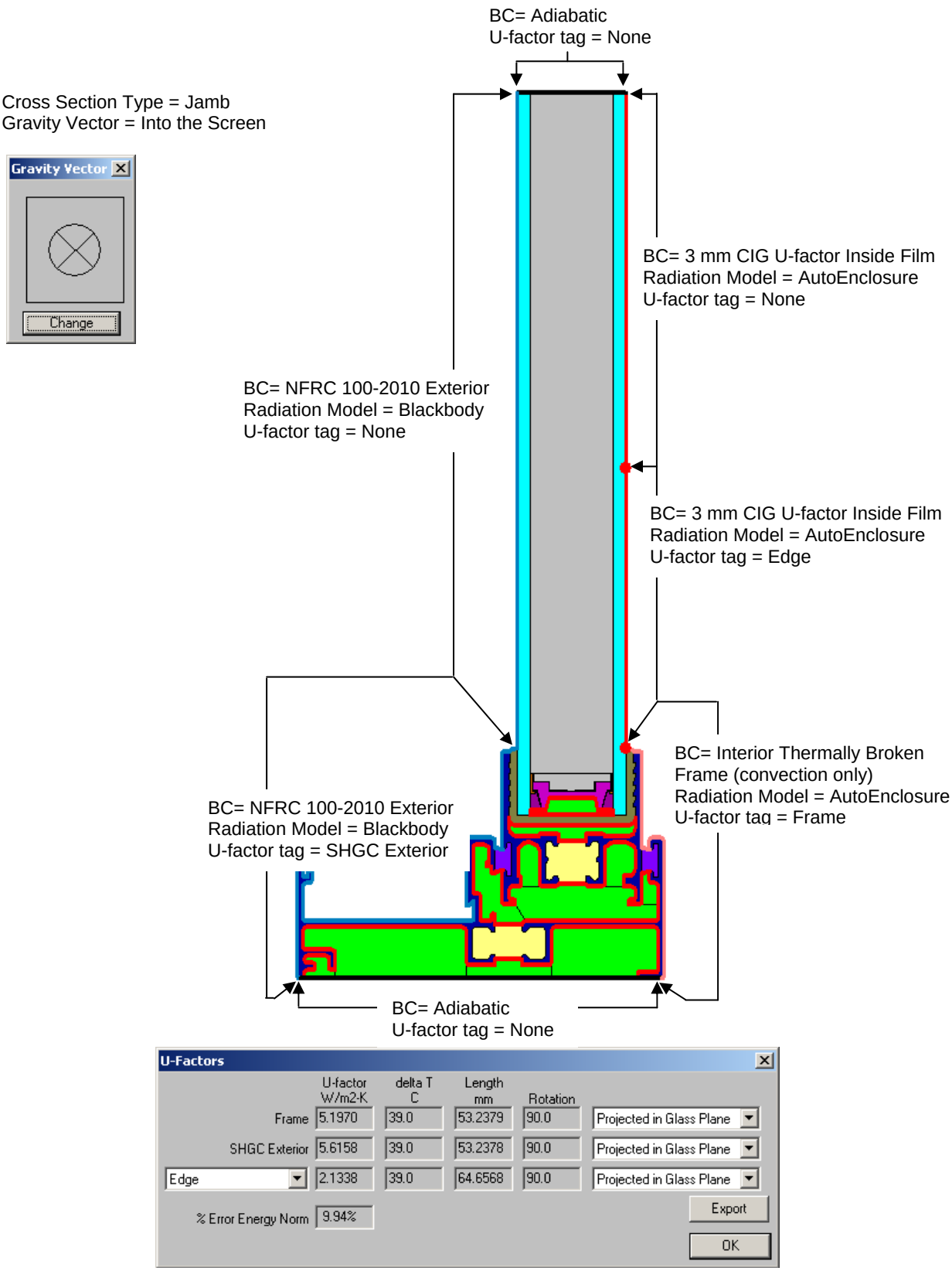

Figure 9-17. THERM cross section and U-factor results for the jamb vent cross section.

Jamb Fixed

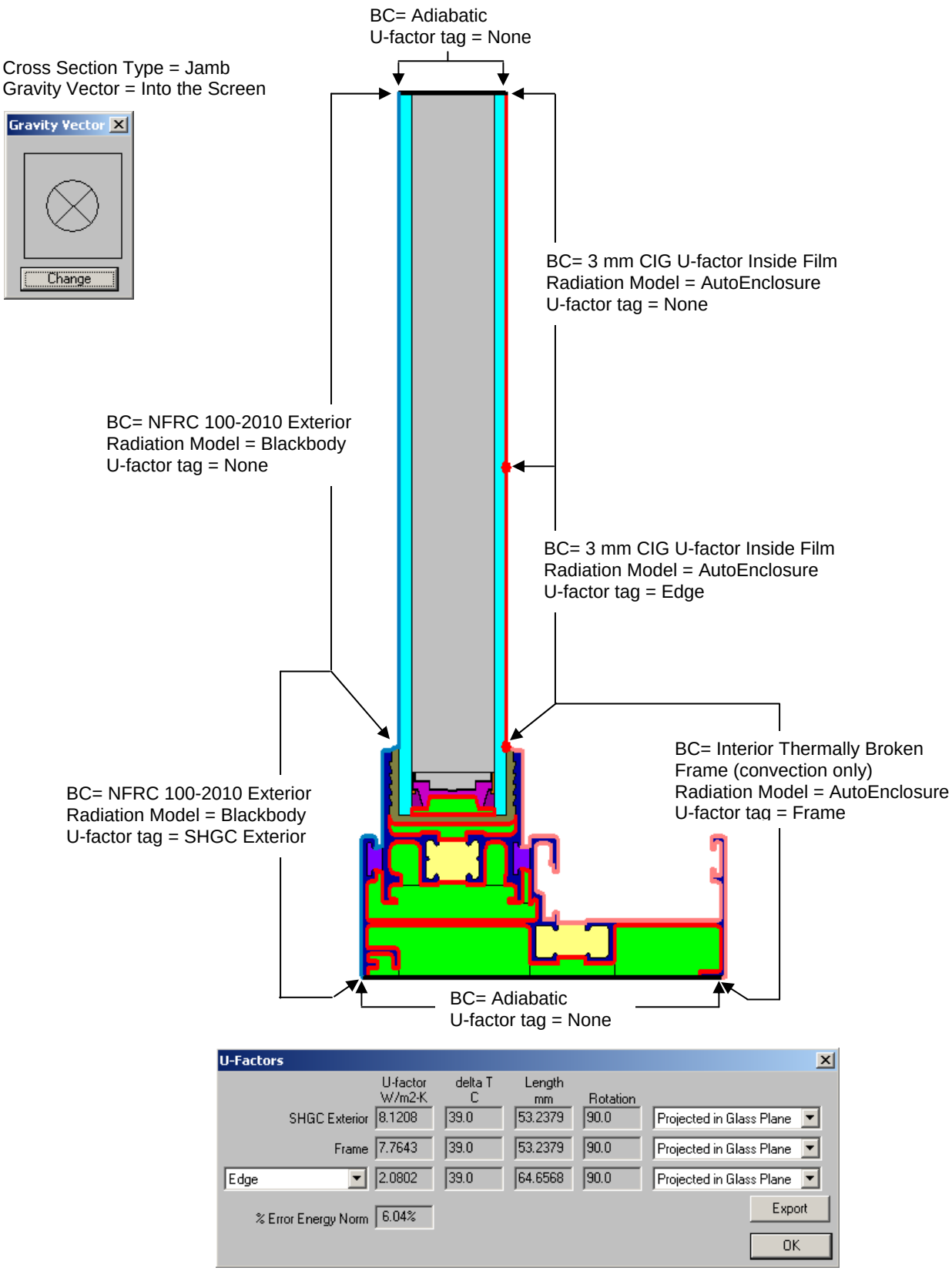

Figure 9-18. THERM cross section and U-factor results for jamb fixed cross section.

Head Vent

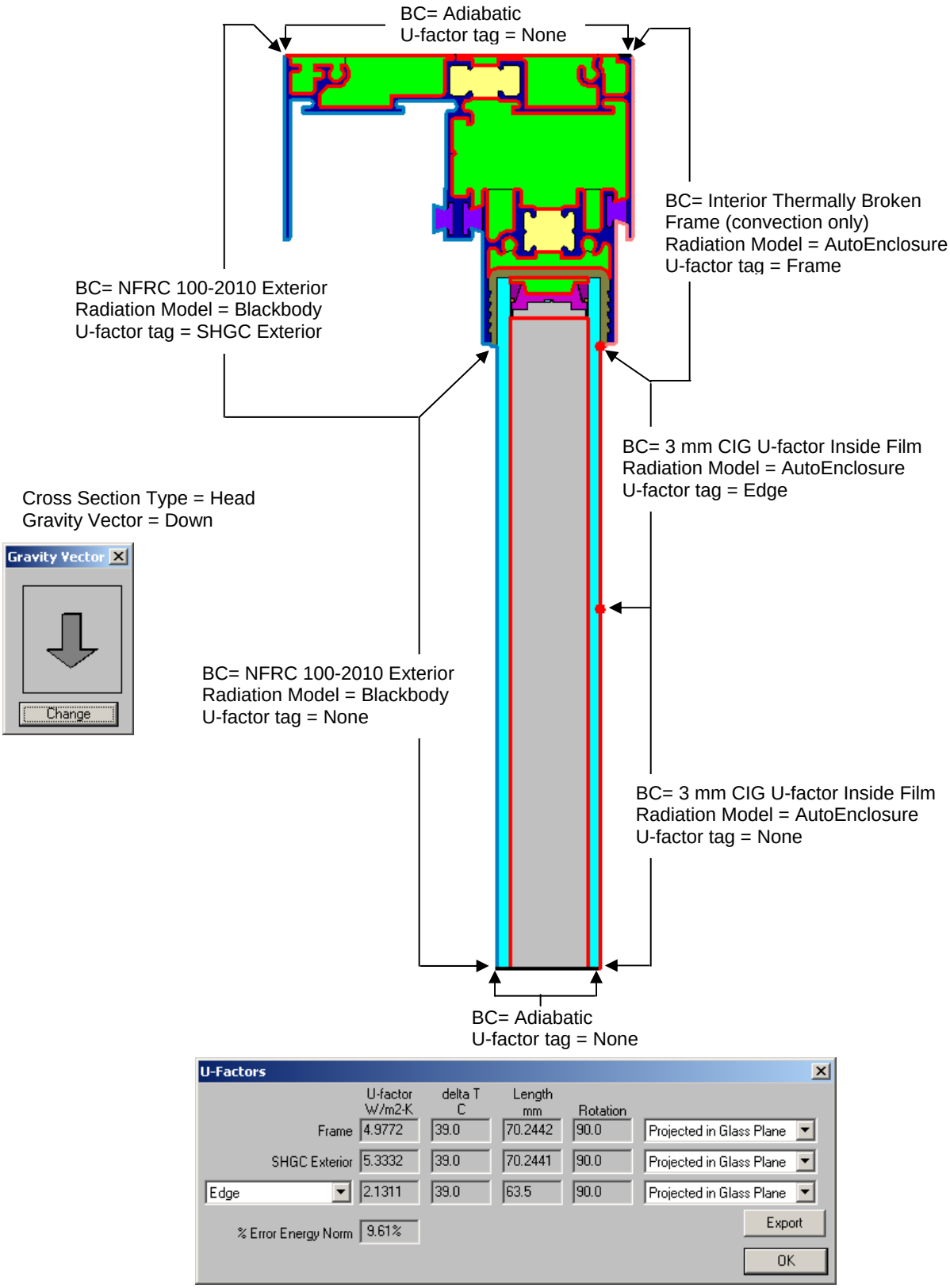

Figure 9-19. THERM cross section and U-factor results for head vent cross section.

Head Fixed

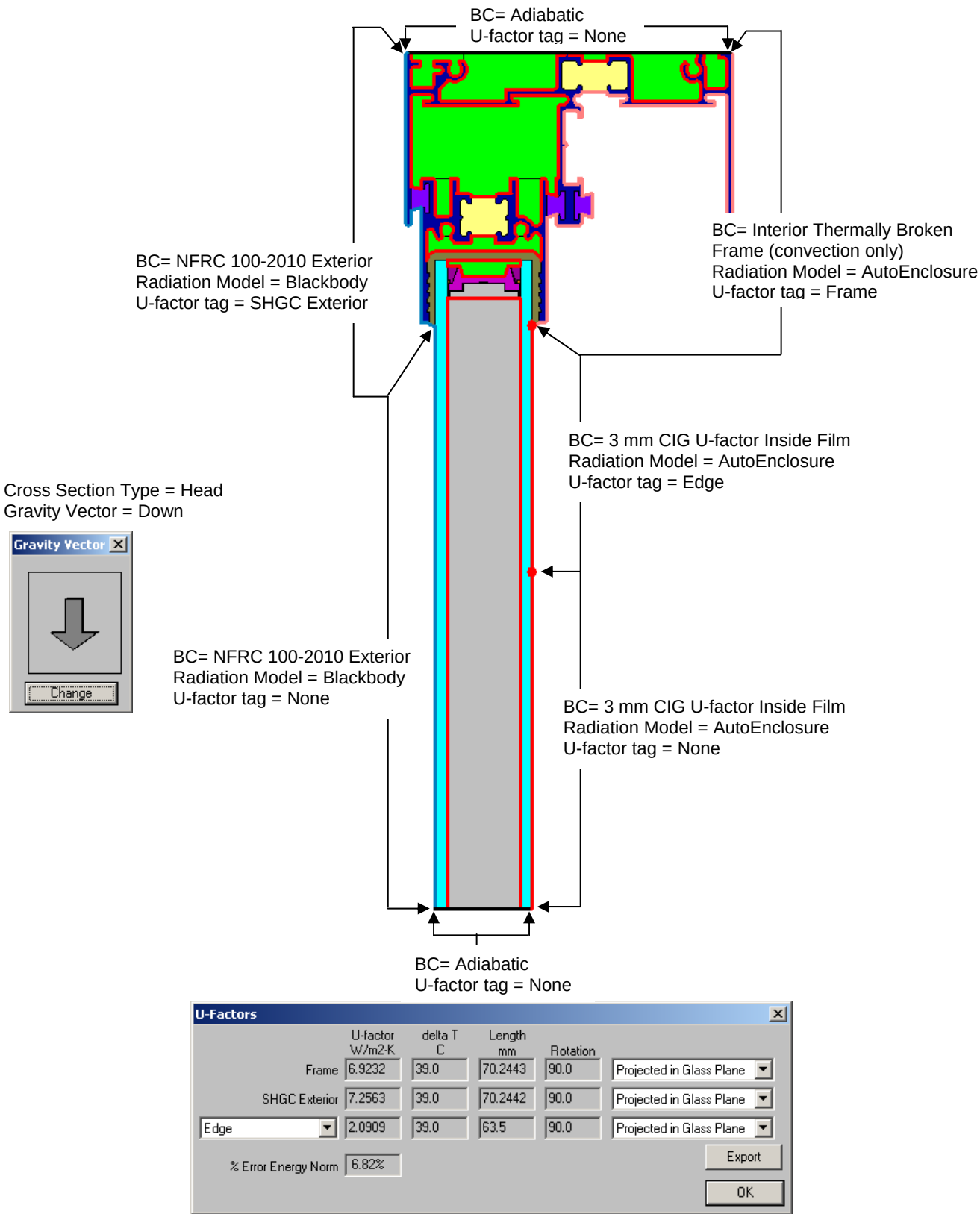

Figure 9-20. THERM cross section and U-factor results for Head Fixed Cross Section.

Meeting Rail

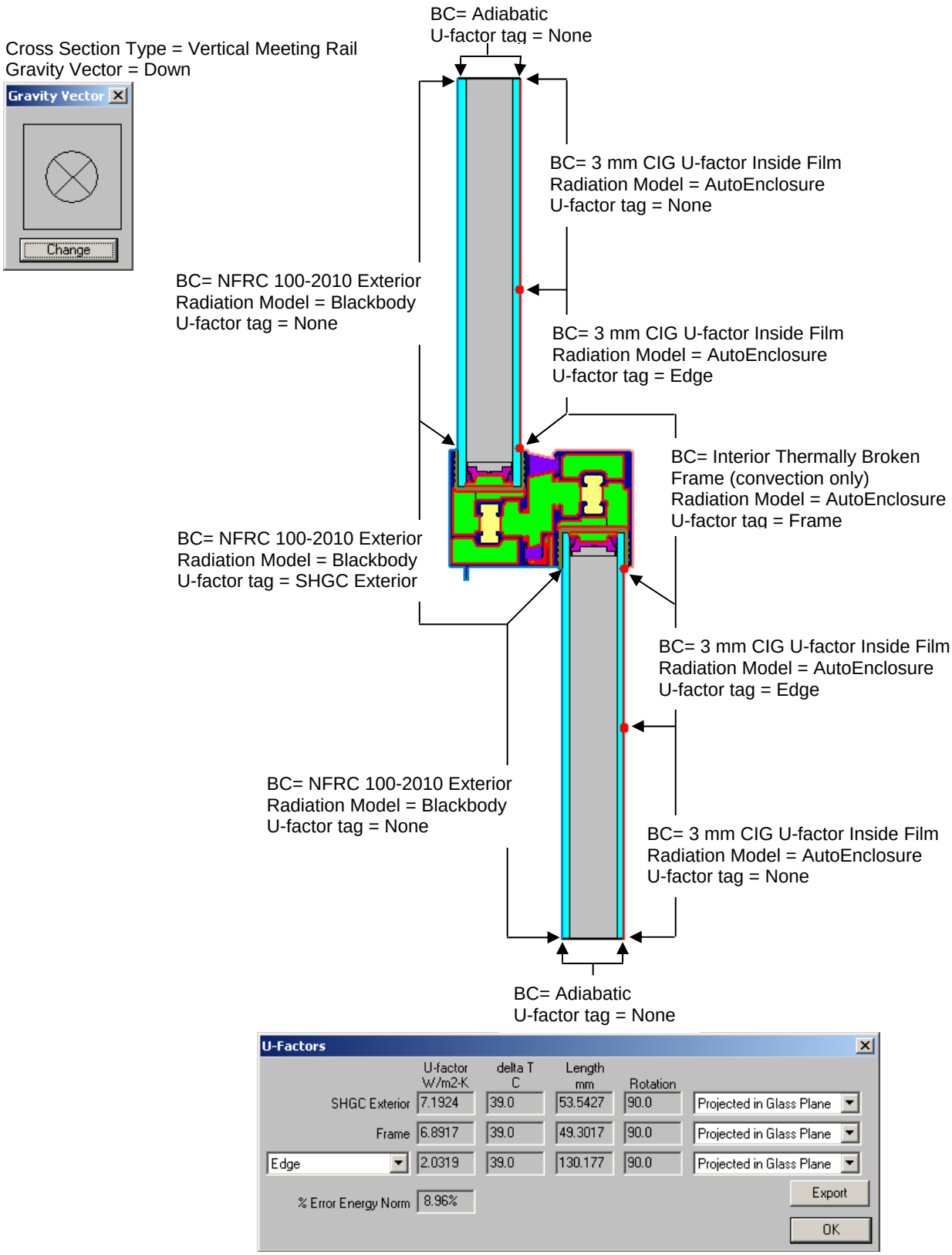

Figure 9-21. THERM cross section and U-factor results for Meeting Rail Cross Section.

9.3.5. Total Product U-Factor

In WINDOW, import the THERM cross sections into the Frame Library.

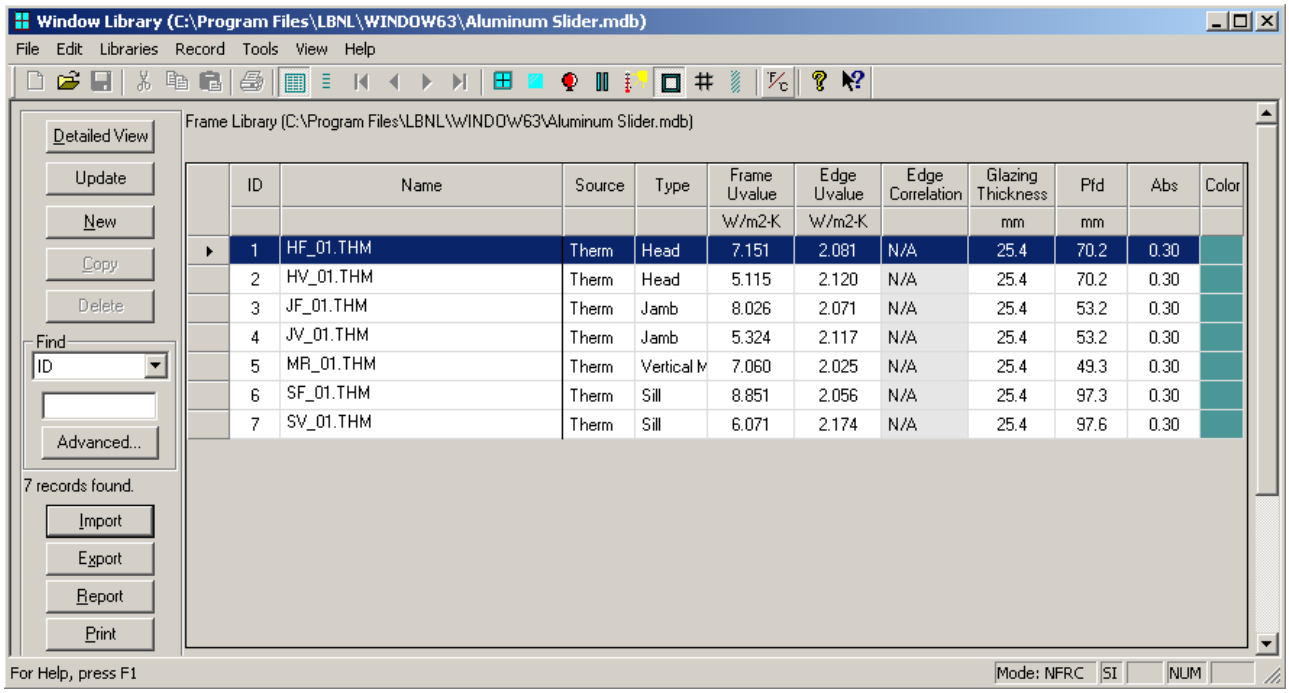

	ID	Name	Source	Type	Frame Uvalue	Edge Uvalue	Edge Correlation	Glazing Thickness	Pfd	Abs	Color
					W/m2-K	W/m2-K		mm	mm		
▸	1	HF_01.THM	Therm	Head	7.151	2.081	N/A	25.4	70.2	0.30	
	2	HV_01.THM	Therm	Head	5.115	2.120	N/A	25.4	70.2	0.30	
	3	JF_01.THM	Therm	Jamb	8.026	2.071	N/A	25.4	53.2	0.30	
	4	JV_01.THM	Therm	Jamb	5.324	2.117	N/A	25.4	53.2	0.30	
	5	MR_01.THM	Therm	Vertical M	7.060	2.025	N/A	25.4	49.3	0.30	
	6	SF_01.THM	Therm	Sill	8.851	2.056	N/A	25.4	97.3	0.30	
	7	SV_01.THM	Therm	Sill	6.071	2.174	N/A	25.4	97.6	0.30	

Figure 9-22. THERM files imported into the Frame Library.

In WINDOW, create a record in the Window Library using the appropriate THERM files from the Frame Library and glazing system from the Glazing System Library, as shown in the figure below.

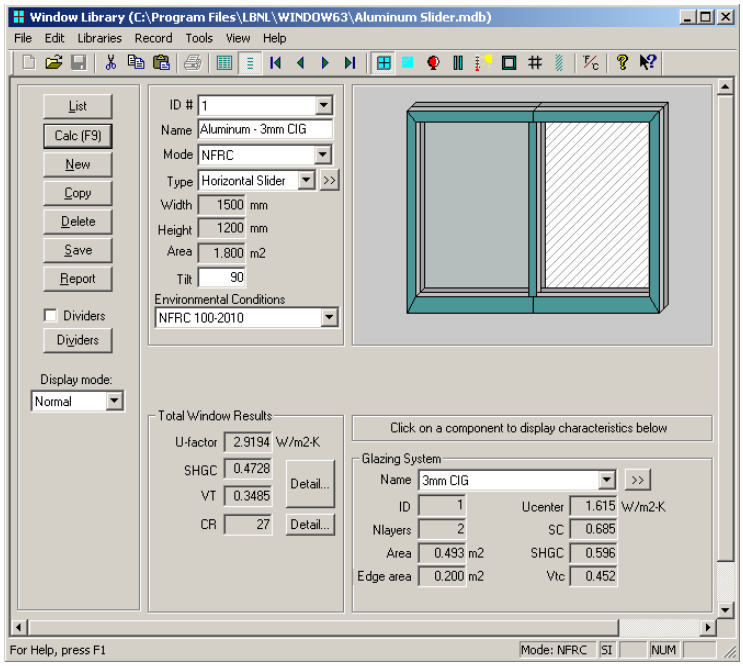

Figure 9-23. Window Library record for the aluminum horizontal slider.

The table below shows the overall product U-factor from WINDOW for Glazing Option 1.

Table 9-12. Total product U-factor.

Glazing Options 25.4 mm (1") overall thickness		Total Product U-Factor	
		W/m^2-°C	$Btu/hr\text{-}ft^2$-°F
1	Clear (3mm), Argon (95%), Low-E (3mm)	2.9194	0.5141

9.3.6. Individual Product SHGC and VT using SHGC 0 & 1 and VT 0 & 1

The methodology for determining the Solar Heat Gain Coefficient (SHGC) and Visible Transmittance (VT) for products is outlined in NFRC 200 using values of $SHGC_0$, $SHGC_1$, VT_0 and VT_1. These values are calculated in WINDOW for the best glazing option modeled with the highest frame and edge U-factor frame, as outlined in NFRC 200, Section 4.2.3 (A).

Since only Glazing Option 1 was modeled for this example, we will assume that it is the best glazing option for the purpose of determining SHGC and VT values.

Using this procedure, display the results for the $SHGC_0$, $SHGC_1$, VT_0 and VT_1 for the best glazing option (Clear, Air, Low-E), by clicking on the **Detail** button on the **Window Library Detailed View** screen, as shown in the figure below. The **SHGC and VT detail** dialog box will show the SHGC and VT values for the following three cases for this glazing option:

- No Dividers
- Dividers ≤ 25.4 mm (modeled as 19.5 mm)
- Dividers > 25.4 mm (modeled as 38.1 mm)

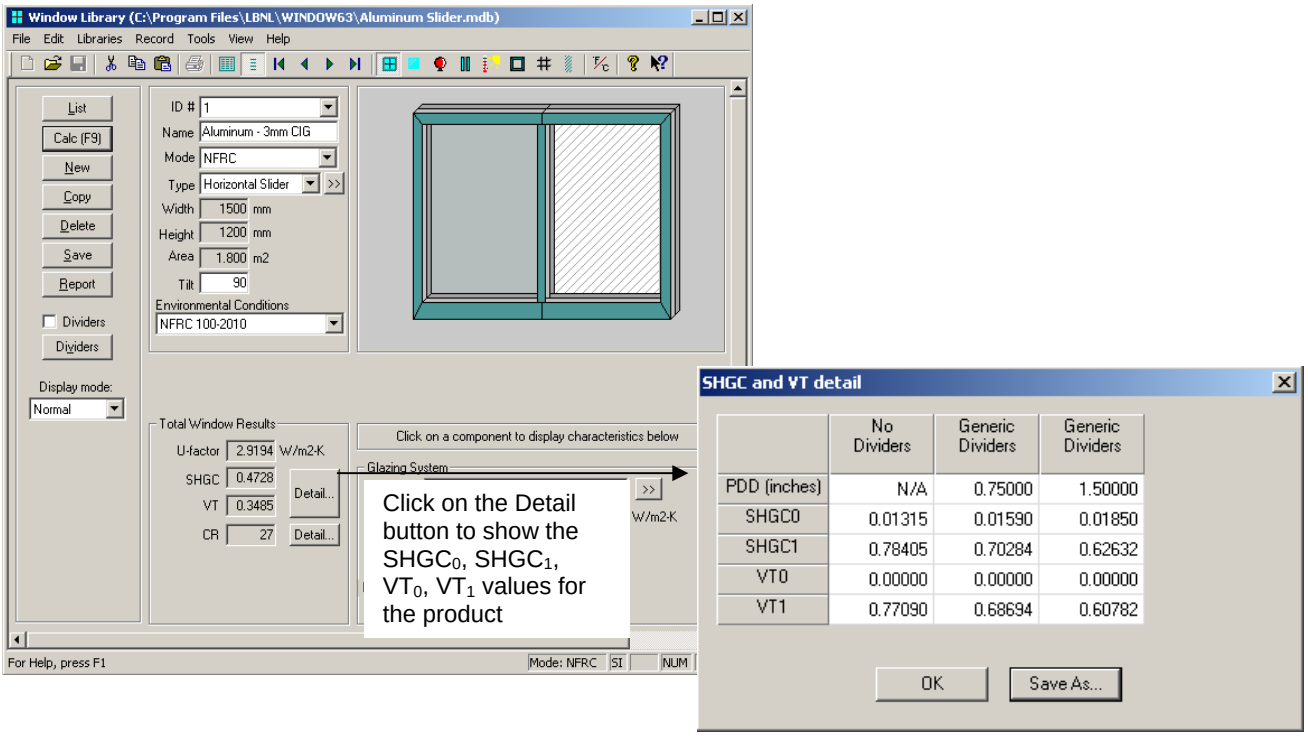

Figure 9-24. Window Library record for the best glazing option for the aluminum horizontal slider.

Table 9-13. $SHGC_0$, $SHGC_1$, VT_0 and VT_1 data for the best glazing option in this product line (Clear, Argon, Low-E)

	No Dividers	**Dividers < 1" (25.4 mm) (modeled at 0.75")**	**Dividers ≥ 1" (25.4 mm) (modeled at 1.5")**
$SHGC_0$	0.01315	0.01590	0.01850
$SHGC_1$	0.78405	0.70284	0.62632
VT_0	0.0	0.0	0.0
VT_1	0.77090	0.68694	0.60782

SHGC Calculation Using Equation 4-1 from NFRC 200

Using Equation 4-1 from NFRC 200 and the data from Table 9-11, calculate the whole product SHGC from the $SHGC_0$, $SHGC_1$, and $SHGC_C$:

$$SHGC = SHGC_0 + SHGC_C\ (SHGC_1 - SHGC_0)$$

Without Dividers:

SHGC = 0.01315 + 0.5971 (0.78405 – 0.01315)
= 0.4735

With Dividers < 1″ (25.4mm) – modeled at 0.75″:

SHGC = 0.01590 + 0.5971 (0.70284 – 0.01590)
= 0.4261

With Dividers ≥ 1″ (25.4mm) modeled at 0.75″:

SHGC = 0.01850 + 0.5971 (0.62632 – 0.01850)
= 0.3814

Table 9-14. Total product SHGC for the best glazing option (Clear, Argon, Low-E).

SHGC			
Glazing Option	**No Dividers**	**Dividers ≤ 25.4 mm, modeled at 19.5 mm (≤ 1.0", modeled at 0.75")**	**Dividers > 25.4 mm, modeled at 38.1 mm (> 1.5", modeled at 1.5")**
Clear, Argon, Low-E	0.4735	0.4261	0.3814

VT Calculation Using Equation 4-2 from NFRC 200

Using Equation 4-2 from NFRC 200 and the data from Table 9-11, calculate the whole product VT from the VT_0, VT_1, and VT_C:

$$VT = VT_0 + VT_C\ (VT_1 - VT_0)$$

Without Dividers:

VT = 0.0 + 0.4521 (0.77090 – 0.0)
= 0.3485

With Dividers < 1″ (25.4mm) – modeled at 0.75″:

VT = 0.0 + 0.4521 (0.68694 – 0.0)

= 0.3106

With Dividers ≥ 1″ (25.4mm) modeled at 0.75″:

VT = 0.0 + 0.4521 (0.60782 – 0.0)

= 0.2748

Table 9-15. Total product VT for the best glazing option (Clear, Argon, Low-E).

VT			
Glazing Option	**No Dividers**	**Dividers ≤ 25.4 mm, modeled at 19.5 mm (≤ 1.0", modeled at 0.75")**	**Dividers > 25.4 mm, modeled at 38.1 mm (> 1.5", modeled at 1.5")**
Clear, Argon, Low-E	0.6434	0.5771	0.5143

9.3.7. Drawings for Aluminum Horizontal Slider

The following pages contain detailed drawings for this window.

Sill Vent

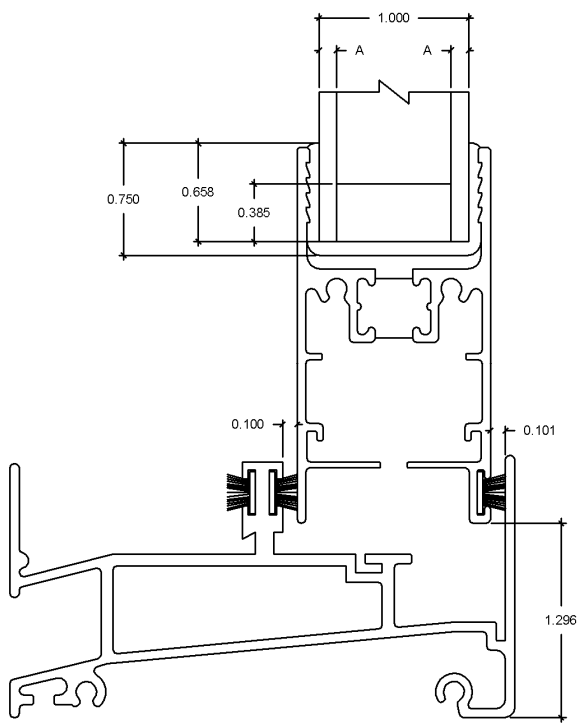

Figure 9-25. Dimensioned drawing for the sill vent cross section.

Sill Fixed

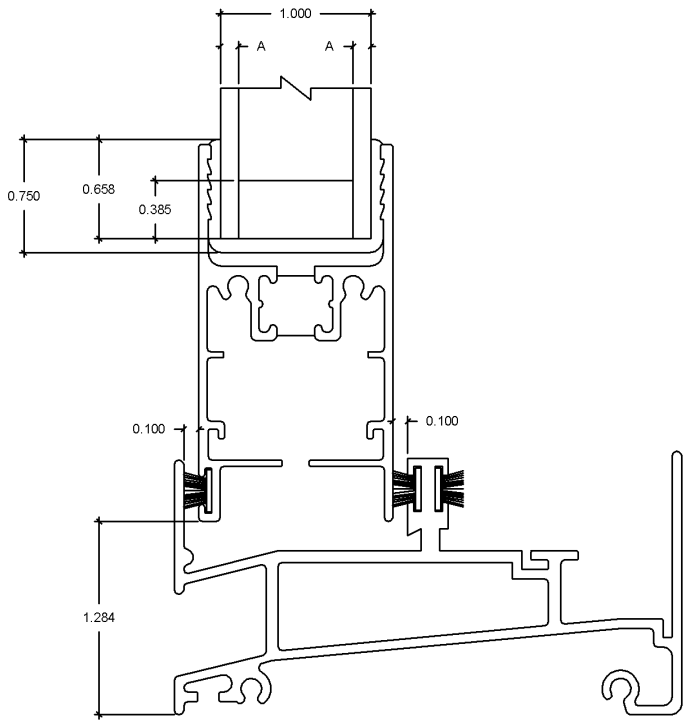

Figure 9-26. Dimensioned drawing for the sill fixed cross section.

Jamb Vent

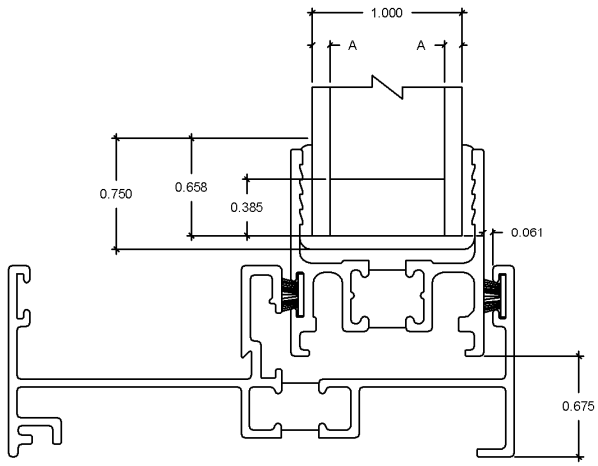

Figure 9-27. Dimensioned drawing for the jamb vent cross section.

Jamb Fixed

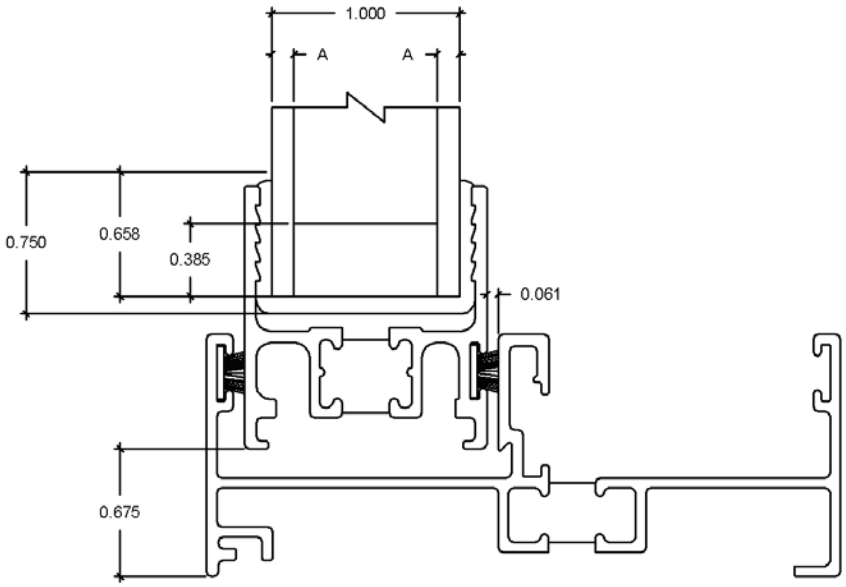

Figure 9-28. Dimensioned drawing for the jamb fixed cross section.

Head Vent

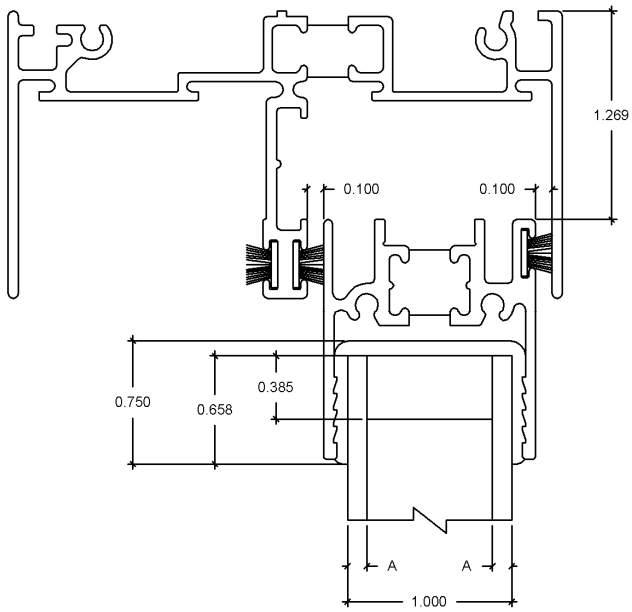

Figure 9-29. Dimensioned drawing for the head vent cross section.

Head Fixed

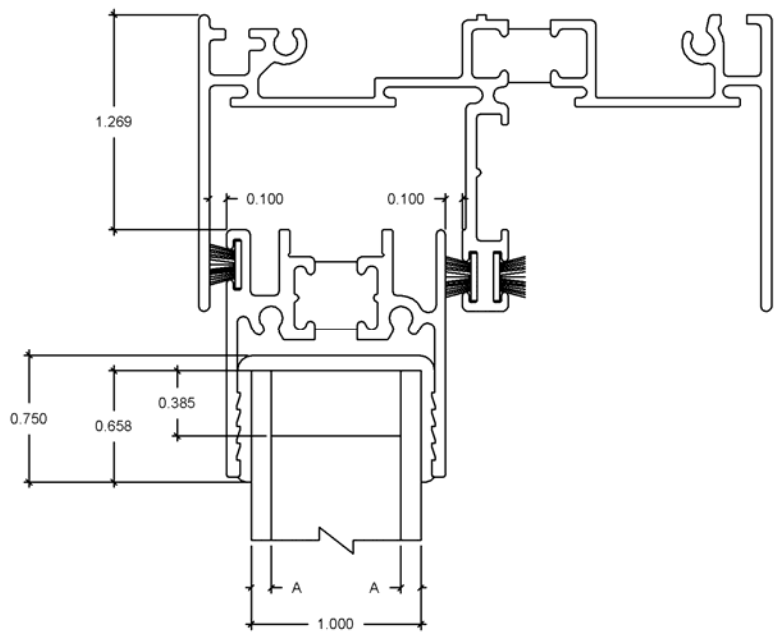

Figure 9-30. Dimensioned drawing for the head fixed cross section.

Meeting Rail

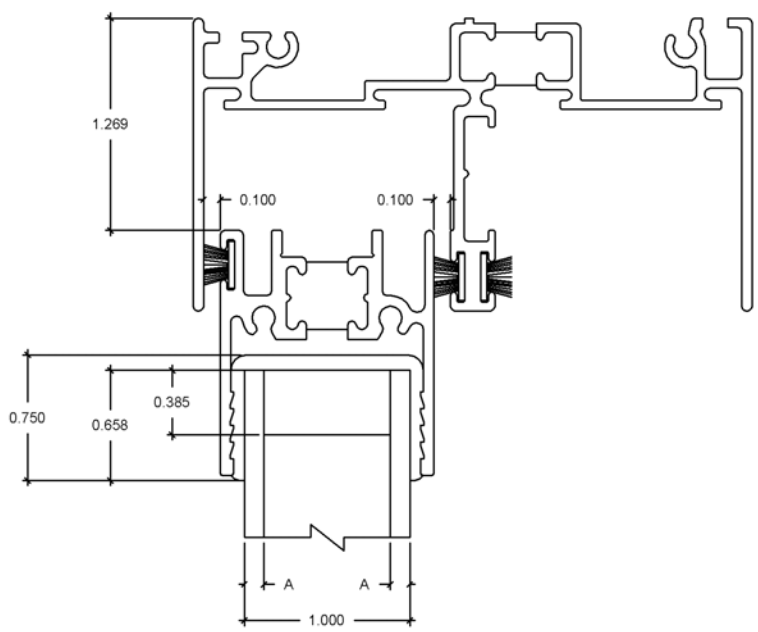

Figure 9-31. Dimensioned drawing for the meeting rail cross section.

Spacer

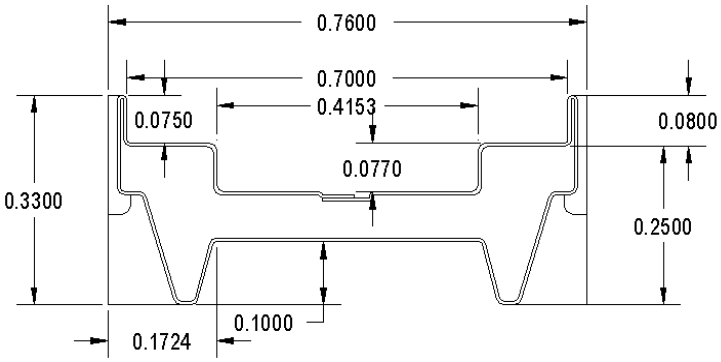

Figure 9-32. Dimensioned drawing for the spacer.

Divider

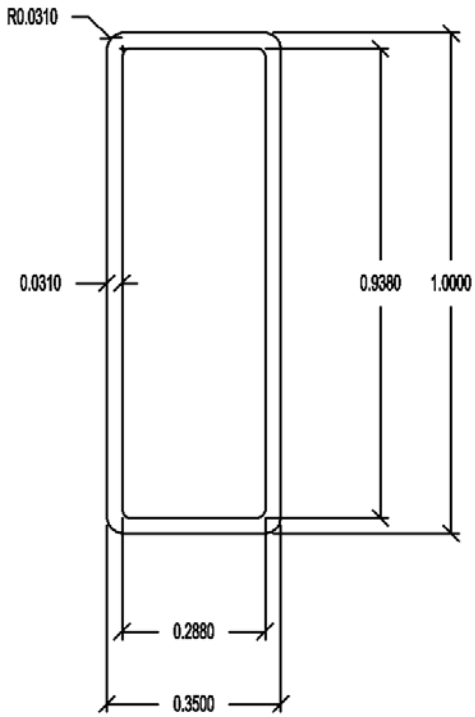

Figure 9-33. Dimensioned drawing for the divider.

9.4 Problem 3: Skylight

9.4.1. Description

Window Type	Skylight.
Overall Size	Width = 1200 mm; Height = 1200 mm
Frame Material	Wood.
Glazing System	Double glazing, 17.0 mm (0.669") overall I.G. thickness. Both the inboard and outboard lites are generic 3 mm clear glass. The glazing cavity is air filled.
Spacer Type	Aluminum folded spacer.
Glazing Method	Butyl rubber sealant.
Dividers	N/A
Cross Sections	See Section 9.4.7 for drawings of this product.

9.4.2. Glazing Matrix

The following table shows the glazing matrix that is to be simulated for the skylight.

Table 9-16. Matrix of glazing options for the skylight.

	Glazing Options 17 mm (0.669") overall thickness	**Grid Option**	**Manufacturer**
1	Clear (3mm), Air, Clear (3mm)	N/A	Generic

9.4.3. Center-of-glazing Modeling (WINDOW)

In WINDOW, create a record for the glazing system using generic 3 mm clear glass for both lites and a 10.9 mm (0.429”) air space (air filled). Make sure to set the “Tilt” to 20º.

The following figure shows the WINDOW Glazing System Library for this glazing system.

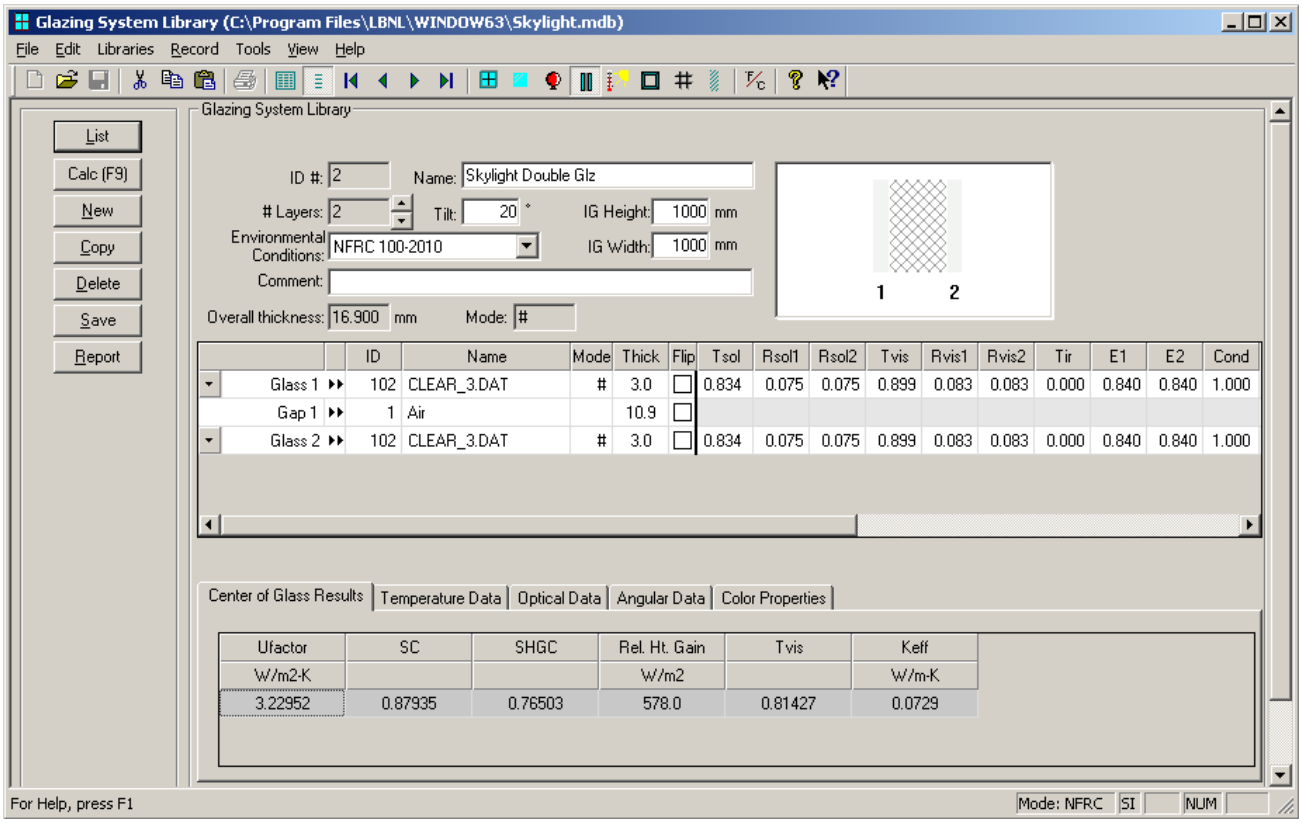

Figure 9-34. WINDOW Glazing System Library for the skylight.

The results for the center-of-glazing U-factor are shown in the following table.

Table 9-17. Center-of-glazing U-factor results from WINDOW

Glazing Options 17 mm (0.669”) overall thickness		**Center-of-glazing U-Factor**	
		W/m^2-ºC	**BTU/hr-ft^2-ºF**
1	Clear (3 mm), Air, Clear (3 mm)	3.22952	0.56875

This glazing system will be used in THERM to calculate the frame and edge-of-glazing U-factors, and also in WINDOW to calculate the overall product U-factor.

9.4.4. Edge-of-glazing and Frame Modeling (THERM)

Skylights are modeled in the same manner as other window products – with separate THERM files for the sill, head, jamb, and so forth. See Section 8-5 of this manual for detailed instructions on modeling skylights. For this example, we will assume that the skylight is flush-mounted.

The following table shows the files for this example.

Table 9-18. Files associated with the skylight example.

Cross Section	DXF Filename	THERM Filename
Sill	Skylight–Frame.dxf	SL.thm
Head	Skylight–Frame.dxf	HD.thm
Jamb	Skylight–Frame.dxf	JB.thm

The table below shows the resulting U-factors for the skylight cross sections.

Table 9-19. THERM results for the skylight cross sections.

	Frame U-Factor		Edge U-Factor	
Cross Section	W/m^2-°C	Btu/hr-ft^2-°F	W/m^2-°C	Btu/hr-ft^2-°F
Sill	4.7604	0.8383	3.5507	0.6253
Head	4.7955	0.8445	3.5527	0.6257
Jamb	4.8084	0.8468	3.5455	0.6244

The figures on the following pages show the THERM cross sections and U-factor results for this window.

Head

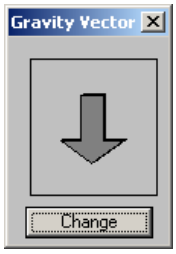

Skylight Head

Modeling Assumptions:

- Cross Section Type = Head
- Gravity Arrow = Down
- Glazing System = Down
- File Rotation = 70° Clockwise

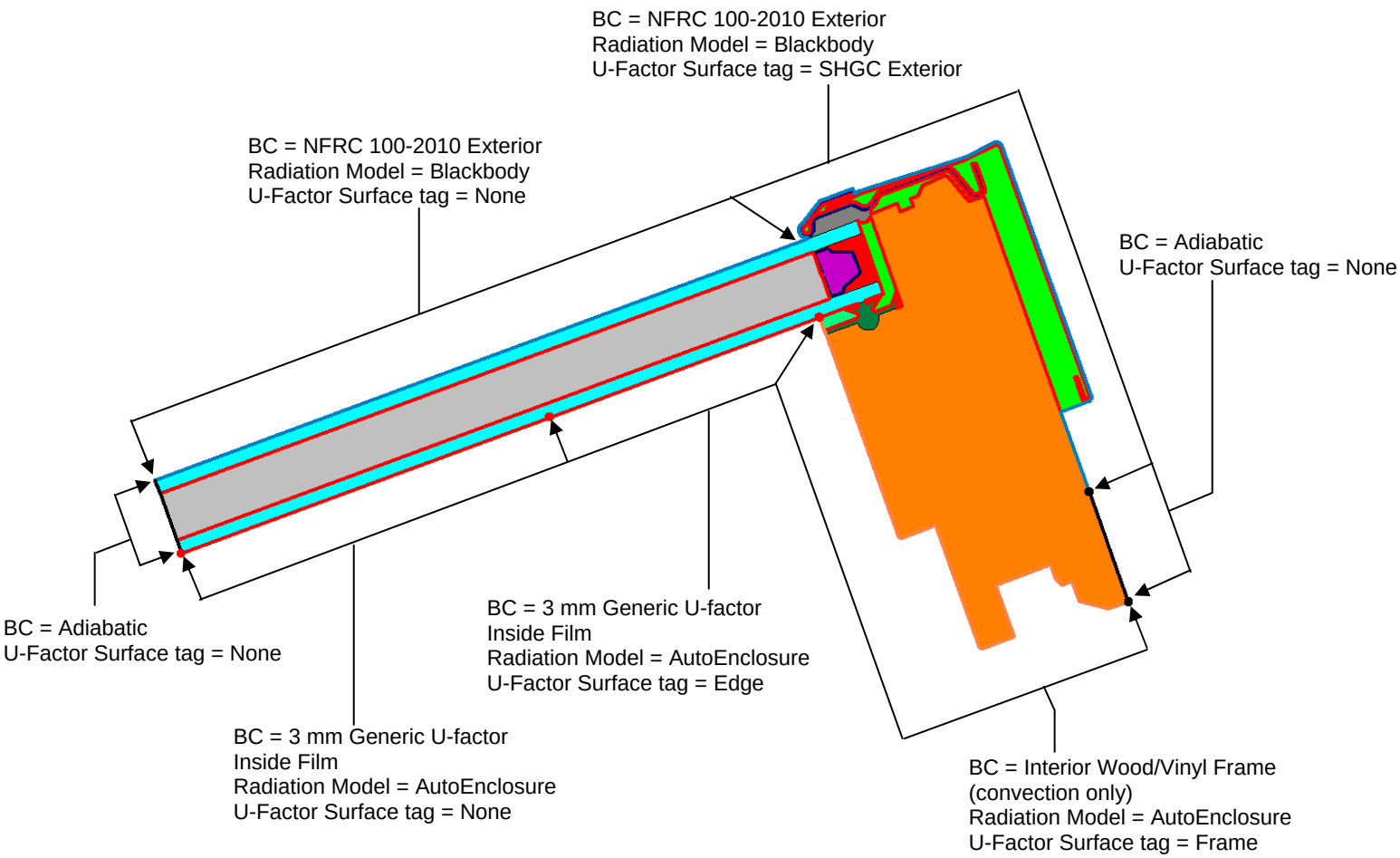

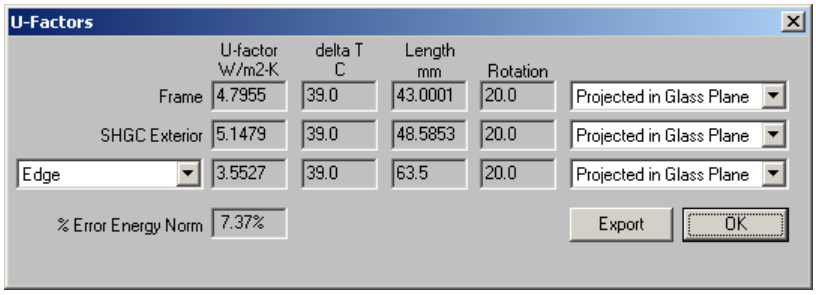

Figure 9-35. THERM cross section and U-factor results for the head cross section.

Sill

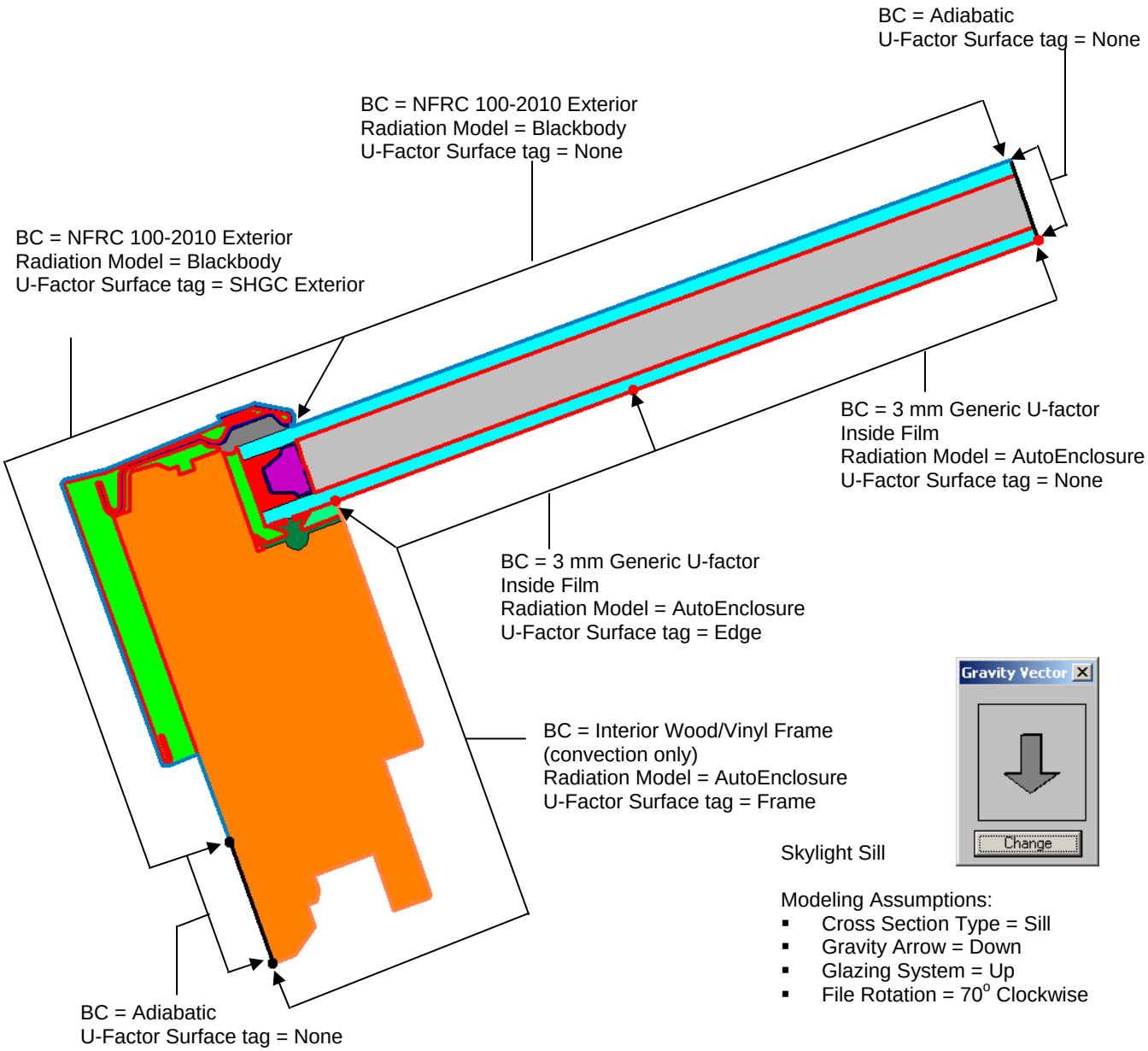

Skylight Sill

Modeling Assumptions:

- Cross Section Type = Sill
- Gravity Arrow = Down
- Glazing System = Up
- File Rotation = 70° Clockwise

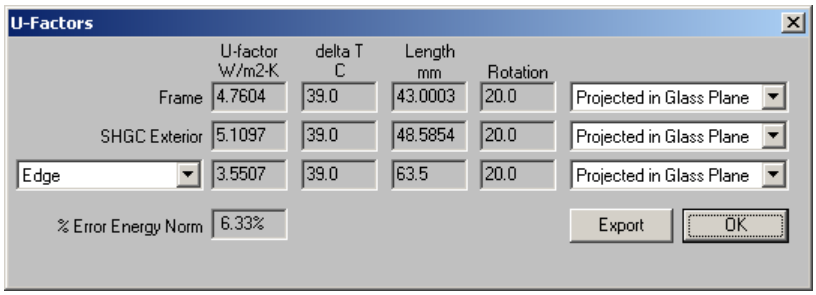

U-Factors

	U-factor W/m2-K	delta T C	Length mm	Rotation	
Frame	4.7604	39.0	43.0003	20.0	Projected in Glass Plane
SHGC Exterior	5.1097	39.0	48.5854	20.0	Projected in Glass Plane
Edge	3.5507	39.0	63.5	20.0	Projected in Glass Plane

% Error Energy Norm 6.33%

Export OK

Figure 9-36. THERM cross section and U-factor results for the sill cross section.

Jamb

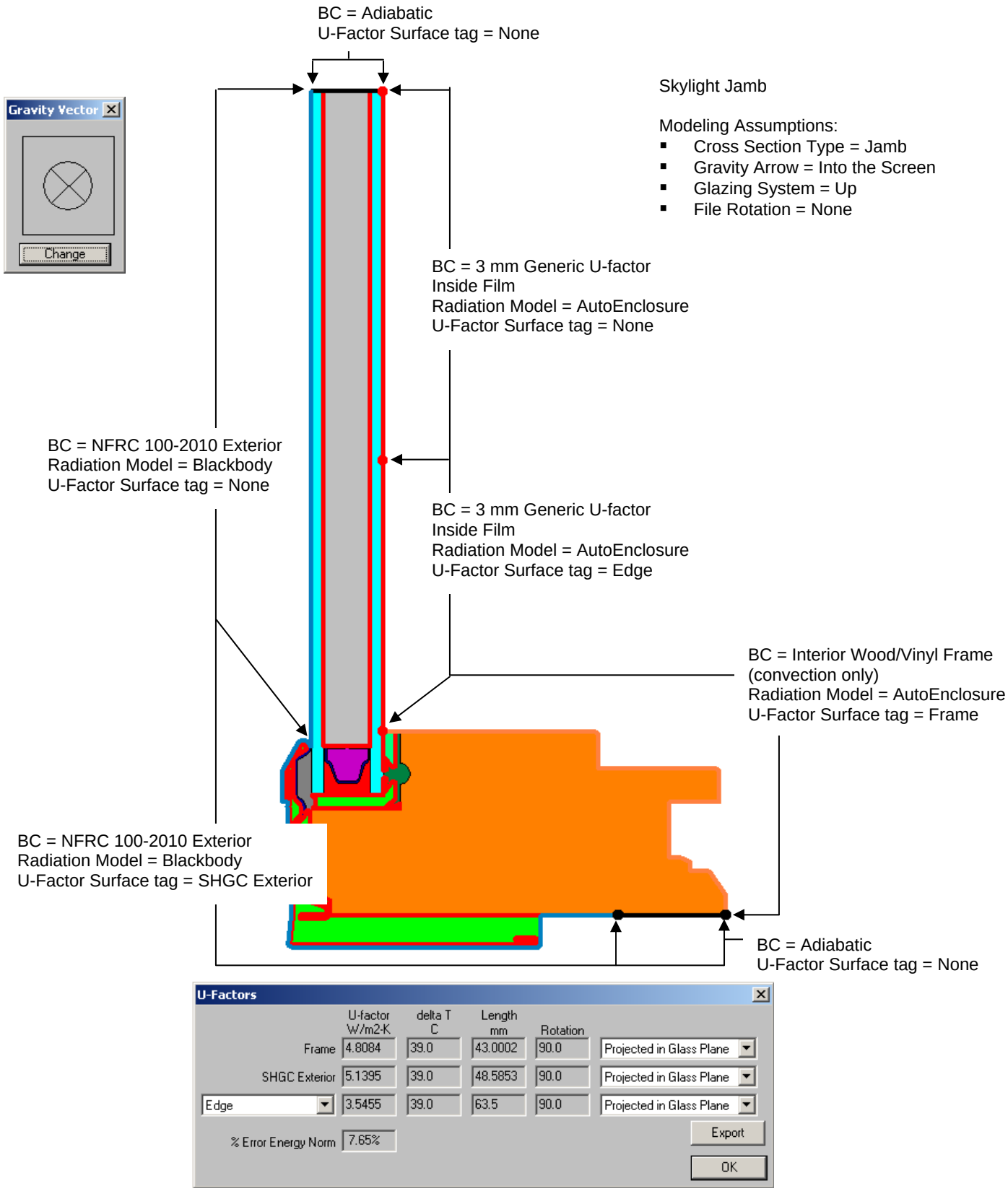

Figure 9-37. THERM cross section and U-factor results for the jamb cross section.

9.4.5. Total Product U-Factor

In WINDOW, import the THERM cross sections into the Frame Library.

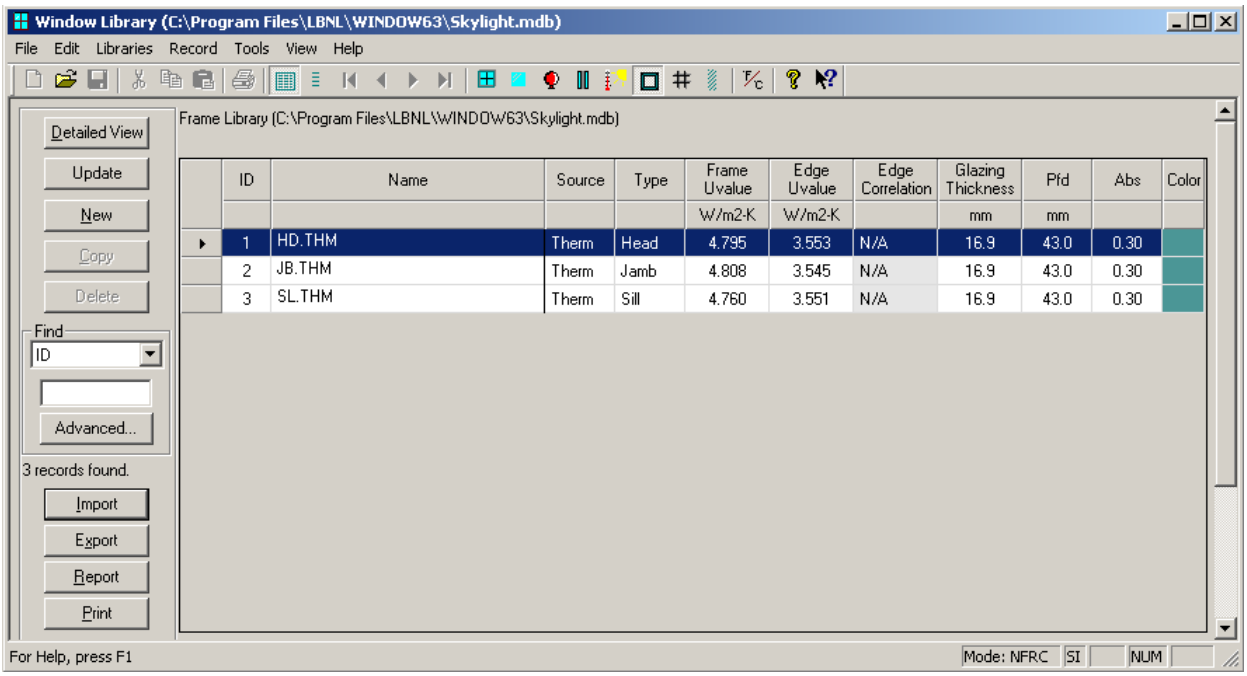

Figure 9-38. WINDOW Frame Library.

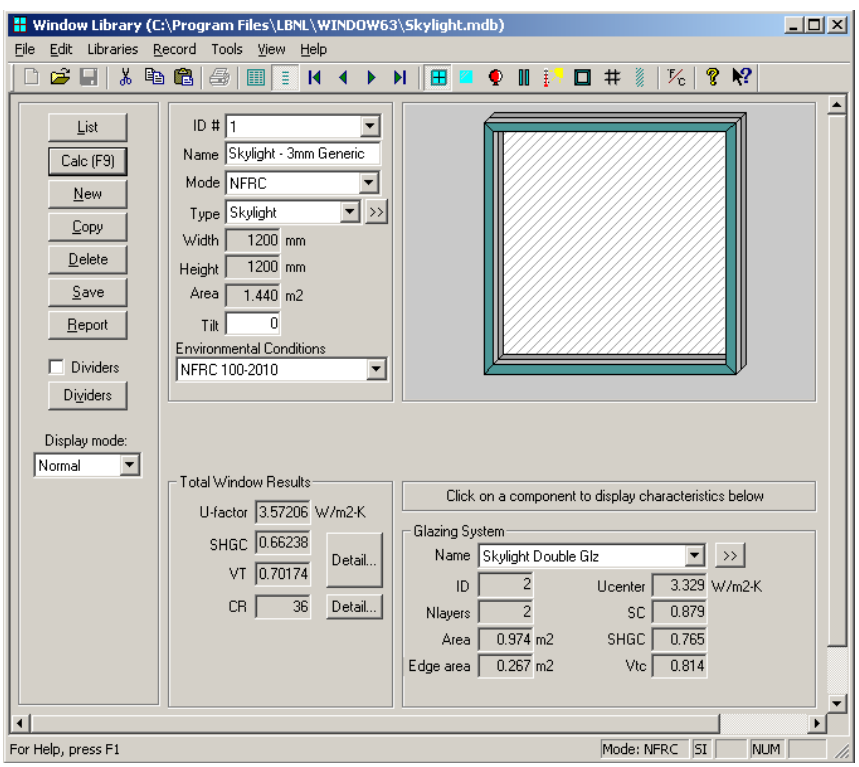

Figure 9-39. Window Library record for the skylight.

Table 9-20. Total product U-factors.

Glazing Options 17 mm (0.669”) overall thickness		Total Product U-Factor	
		W/m^2-°C	Btu/hr-ft^2-°F
1	Clear, Air, Clear	3.57206	0.62908

9.4.6. Individual Product SHGC and VT using SHGC 0 & 1 and VT 0 & 1

The methodology for determining the Solar Heat Gain Coefficient (SHGC) and Visible Transmittance (VT) for products is outlined in NFRC 200 using values of $SHGC_0$, $SHGC_1$, VT_0 and VT_1. These values are calculated in WINDOW for the best glazing option modeled with the highest frame and edge U-factor frame, as outlined in NFRC 200, Section 4.2.3 (A).

Display the results for the $SHGC_0$, $SHGC_1$, VT_0 and VT_1 for the best glazing option (Clear, Air, Clear), as shown in Figure 9-40.

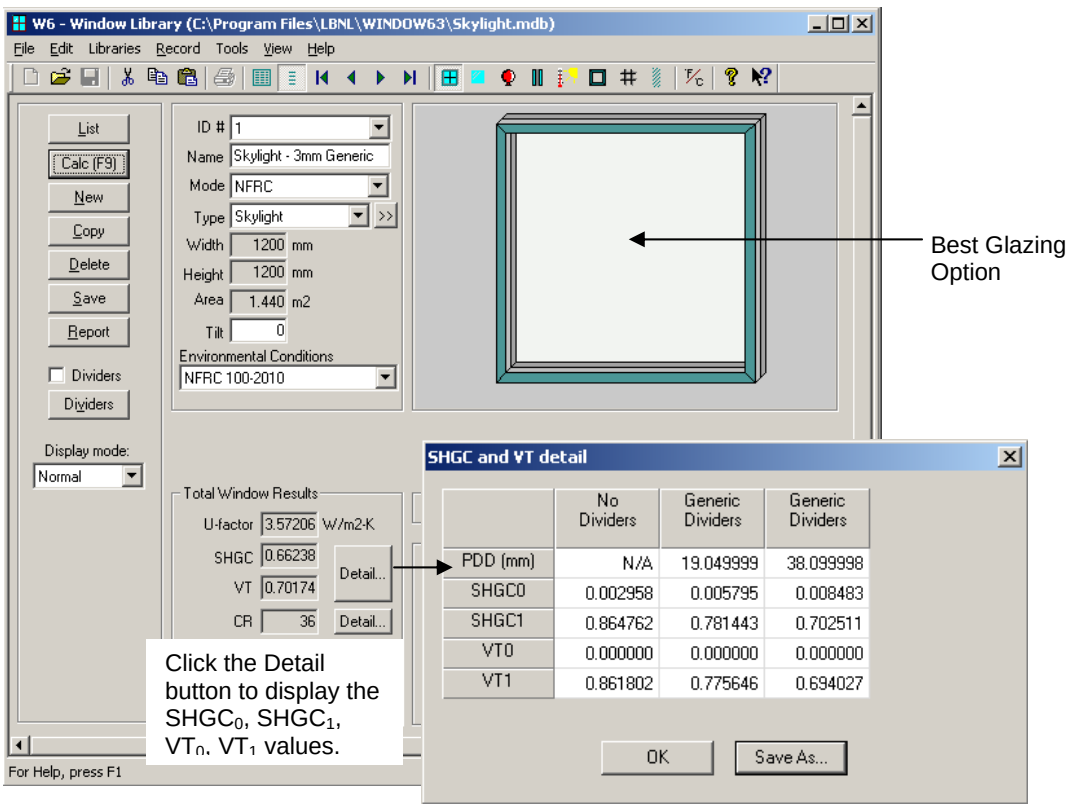

Figure 9-40. Window Library record for the best glazing option.

Table 9-21. $SHGC_0$, $SHGC_1$, VT_0 and VT_1 data for the best glazing option in this product line (Clear, Air, Clear)

	No Dividers	**Dividers < 1" (25.4 mm) (modeled at 0.75")**	**Dividers ≥ 1" (25.4 mm) (modeled at 1.5")**
$SHGC_0$	0.002958	0.005795	0.008483
$SHGC_1$	0.864762	0.781443	0.702511
VT_0	0.0	0.0	0.0
VT_1	0.861802	0.775647	0.694027

SHGC Calculation Using Equation 4-1 from NFRC 200

Using Equation 4-1 from NFRC 200 and the data from Table 9-21, calculate the whole product SHGC from the $SHGC_0$, $SHGC_1$, and $SHGC_C$:

$$SHGC = SHGC_0 + SHGC_C\ (SHGC_1 - SHGC_0)$$

Without Dividers:

SHGC = 0.002958 + 0.76504 (0.864762 – 0.002958)

= 0.66227

With Dividers < 1″ (25.4mm) – modeled at 0.75″:

SHGC = 0.005795 +0.76504 (0.0.781443 – 0.005795)

= 0.59920

With Dividers ≥ 1″ (25.4mm) modeled at 0.75″:

SHGC = 0.008483 + 0.76504 (0.702511 – 0.008490)

= 0.53944

Table 9-22. Total product SHGC for the best glazing option (Clear, Air, Clear).

SHGC			
Glazing Option	**No Dividers**	**Dividers < 1" (25.4 mm) (modeled at 0.75")**	**Dividers ≥ 1" (25.4 mm) (modeled at 1.5")**
Clear, Air, Clear	0.66227	0.59920	0.53944

VT Calculation Using Equation 4-2 from NFRC 200

Using Equation 4-2 from NFRC 200 and the data from Table 9-21, calculate the whole product VT from the VT_0, VT_1, and VT_C:

$$VT = VT_0 + VT_C (VT_1 - VT_0)$$

Without Dividers:

VT = 0.0 + 0.81427 (0.861802– 0.0)
= 0.7017

With Dividers < 1″ (25.4mm) – modeled at 0.75″:

VT = 0.0 + 0.81427 (0.775647– 0.0)
= 0.6316

With Dividers ≥ 1″ (25.4mm) modeled at 0.75″:

VT = 0.0 + 0.81427 (0.694027– 0.0)
= 0.5651

Table 9-23. Total product VT for the best glazing option (Clear, Air, Clear).

VT			
Glazing Option	**No Dividers**	**Dividers < 1” (25.4 mm) (modeled at 0.75”)**	**Dividers ≥ 1” (25.4 mm) (modeled at 1.5”)**
Clear, Air, Clear	0.7017	0.6316	0.5651

9.4.7. Skylight Drawings.

The following are detailed drawings for the skylight.

Head, Sill and Jamb

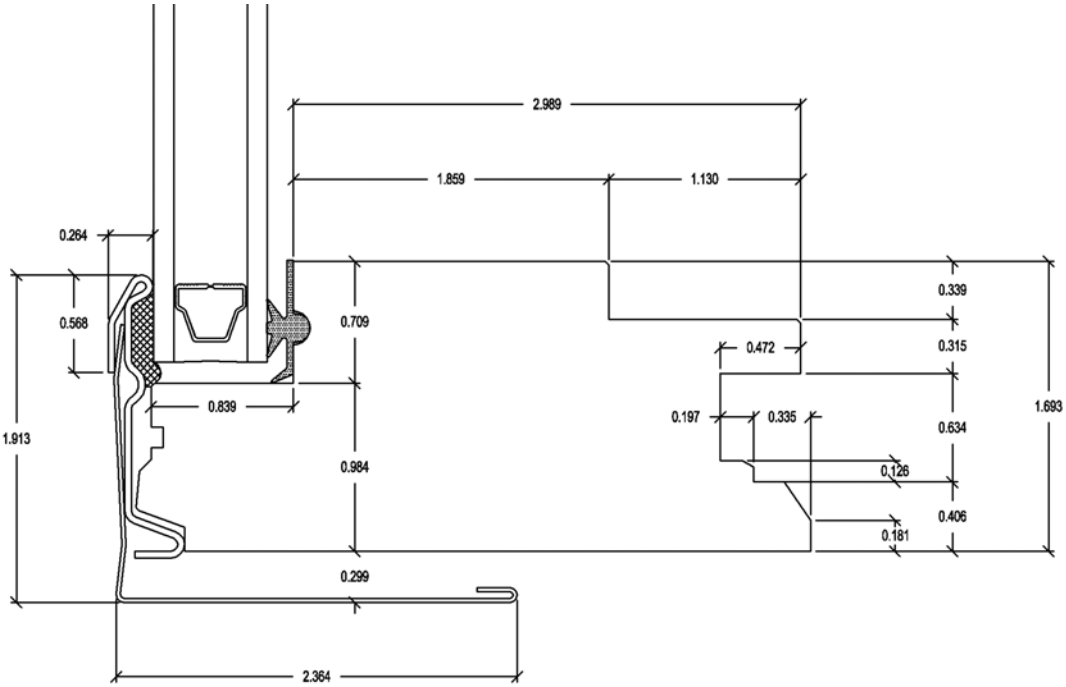

Figure 9-41. Dimensioned drawing for the frame.

Spacer

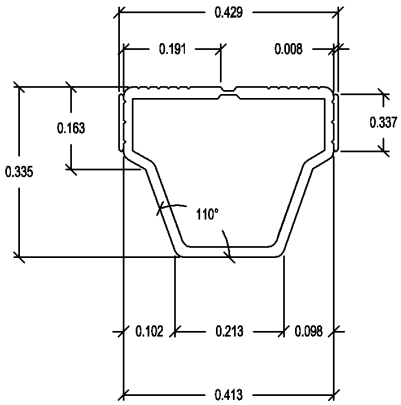

Figure 9-42. Dimensioned drawing for the spacer.

9.5 Problem 4: Door

For this wood stile and rail door, calculate the U-factor, SHGC and VT.

9.5.1. Description

Door Type	Wood stile-and-rail door.
Overall Size	Width = 1000 mm; Height = 2000 mm
Frame Material	Wood with a thermal-break aluminum sill.
Glazing System	Double glazing, 12.7 mm (0.5″) overall IG thickness. There are four glass options, all with two layers of 3 mm (0.129″) PPG glass.
Spacer Type	Intercept spacer with butyl sealant on three sides.
Glazing Tape	Wet glazed with silicone (on both sides).
Dividers	N/A
Cross Sections	See Section 9.5.7 for drawings of this product.

9.5.2. Glazing Matrix

The table below shows the glazing matrix that is to be simulated for the door.

Table 9-24. Matrix of glazing options for the door.

	Glazing Options 12.7 mm (0.5”) overall thickness	**Grid Option**	**Manufacturer**
1	Clear (3mm), Air, Clear (3mm)	N/A	PPG
2	Clear (3mm), Argon (95%), Clear (3mm)	N/A	PPG
3	Low-E (3mm), Air, Clear (3mm)	N/A	PPG
4	Low-E (3mm), Argon (95%), Clear (3mm)	N/A	PPG

9.5.3. Center-of-Glazing Modeling (WINDOW)

In WINDOW, create four records for the glazing systems described in the glazing matrix.

The figure below shows the WINDOW Glazing System Library for this glazing system.

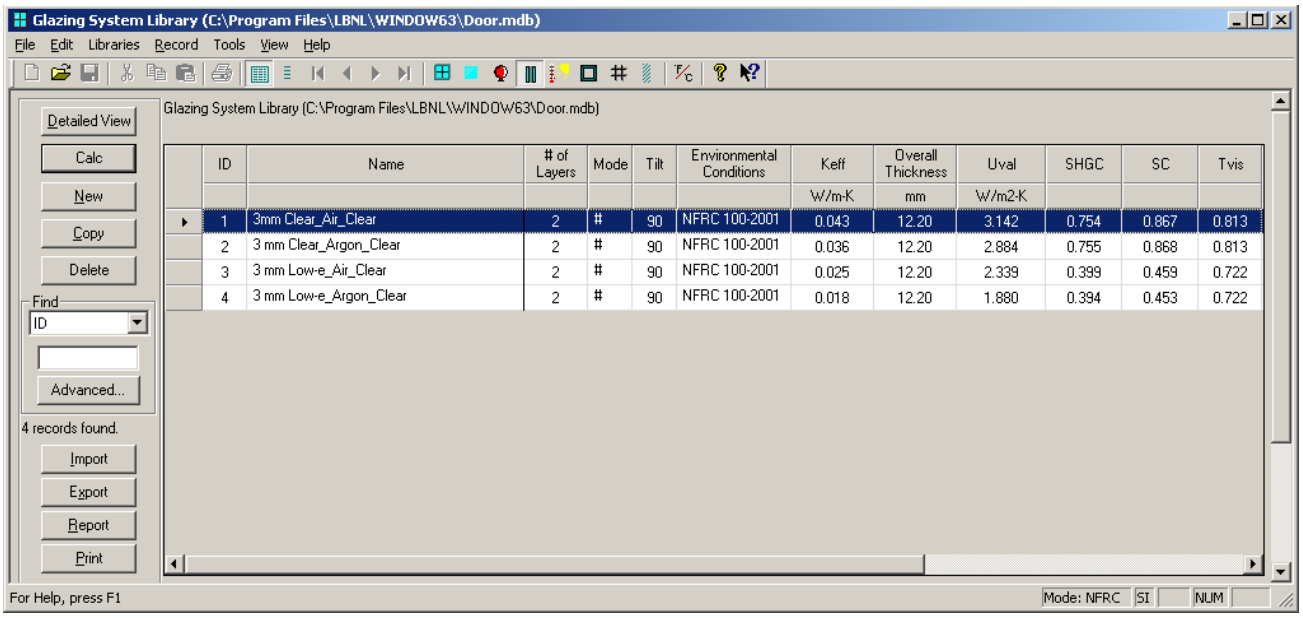

	ID	Name	# of Layers	Mode	Tilt	Environmental Conditions	Keff	Overall Thickness	Uval	SHGC	SC	Tvis
							W/m-K	mm	W/m2-K			
▸	1	3mm Clear_Air_Clear	2	#	90	NFRC 100-2001	0.043	12.20	3.142	0.754	0.867	0.813
	2	3 mm Clear_Argon_Clear	2	#	90	NFRC 100-2001	0.036	12.20	2.884	0.755	0.868	0.813
	3	3 mm Low-e_Air_Clear	2	#	90	NFRC 100-2001	0.025	12.20	2.339	0.399	0.459	0.722
	4	3 mm Low-e_Argon_Clear	2	#	90	NFRC 100-2001	0.018	12.20	1.880	0.394	0.453	0.722

Figure 9-43. WINDOW Glazing System Library for the door.

The results for the center-of-glazing U-factors are shown in Table 9-35.

Table 9-25. Center-of-glazing U-factor results from WINDOW.

Glazing Options 12.7 mm (0.5”) overall thickness		Center-of-glazing U-Factor	
		W/m^2-ºC	BTU/hr-ft^2-ºF
1	Clear (3mm), Air, Clear (3mm)	3.14238	0.55340
2	Clear (3mm), Argon (95%), Clear (3mm)	2.88406	0.50791
3	Low-E (3mm), Air, Clear (3mm)	2.33880	0.41189
4	Low-E (3mm), Argon (95%), Clear (3mm)	1.87978	0.33105

These U-factors will be used with the edge-of-glazing and frame values from THERM to calculate the overall U-factor for the door in Section 9.5.6 (note that four significant digits have been included as these values will be entered into a spreadsheet in order to calculate overall U-factors).

9.5.4. Edge-of-glazing and Frame Modeling for U-Factor (THERM)

There are a minimum of six and a maximum of ten cross sections that must be modeled for an entry door system:

- Head
- Lock Jamb
- Hinge Jamb
- Sill
- Panel Edge
- Panel Core
- Door Core
- Door Lite Head
- Door Lite Sill
- Door Lite Jamb

The door in this example has identical cross sections for both jambs, so only one jamb model will be required. The door core model has been added to the head model, and the panel core model has been added to the panel edge model.

Some simulations required additional lites to be modeled for each door lite cross section (head, sill and jamb) – one for each glass option. To generate the additional glazing options, a "base" file for each Door Lite cross section has been created using Glazing Option 1. As shown in Figure 9-44, add the remaining options in the Glazing System Options dialog box. When the base file is simulated, the additional door lite options will be automatically created.

Window5 does not recognize any U-factor surface tags other than "Edge", "Frame", or "None". If you import door THERM files into WINDOW with U-factor surface tags on the interior boundaries other than those values, the WINDOW fields will not be correct. If you intend to import these files into WINDOW use only the "Edge", "Frame", or "None" U-factor surface tags for the THERM file interior boundary surfaces. Because of this, as well as the fact that WINDOW can not area-weight the opaque portions of the door models, total product values must be manually calculated externally, by inputting the center-of-glazing results from WINDOW and the frame and edge results from THERM into a spreadsheet.

The table below shows the files for this example.

Table 9-26. Files associated with the door example.

Cross Section	DXF Filename	THERM Filename
Head	Door-Frame.dxf	HD.thm
Lock & Hinge Jambs	Door-Frame.dxf	JB.thm
Sill	Door-Sill.dxf	SL.thm
Panel Edge	Door-Panel Edge.dxf	PE.thm
Door Lite Sill Base Case	Door-Lite.dxf	LT-SL.thm
Door Lite Head Base Case	Door-Lite.dxf	LT-HD.thm
Door Lite Jamb Base Case	Door-Lite.dxf	LT-JB.thm
Door Lite Sill Option 1		LT-SL_001.thm
Door Lite Head Option 1		LT-HD_001.thm
Door Lite Jamb Option 1		LT-JB_001.thm
Door Lite Sill Option 2		LT-SL _002.thm
Door Lite Head Option 2		LT-HD_002.thm
Door Lite Jamb Option 2		LT-JB_002.thm
Door Lite Sill Option 3		LT-SL_003.thm
Door Lite Head Option 3		LT-HD_003.thm
Door Lite Jamb Option 3		LT-JB_003.thm
Door Lite Sill Option 4		LT-SL_004.thm
Door Lite Head Option 4		LT-HD_004.thm
Door Lite Jamb Option 4		LT-JB_004.thm

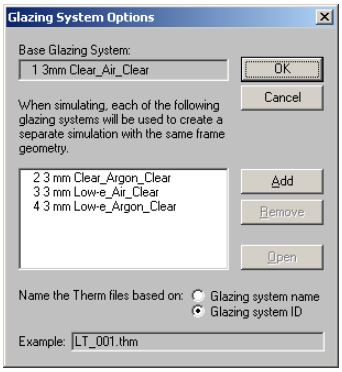

Figure 9-44. Glazing System Options for Lite.thm.

Table 9-27 shows the resulting U-factors for the door cross section.

Table 9-27. THERM results for the door cross sections.

	Frame U-Factor		Edge U-Factor	
Cross Section	**W/m^2-ºC**	**BTU/hr-ft^2-ºF**	**W/m^2-ºC**	**BTU/hr-ft^2-ºF**
Head	2.0449	0.3417	N/A	N/A
Jamb	1.9347	0.3407	N/A	N/A
Sill	2.3649	0.4165	N/A	N/A
Door Core (HD.thm)	2.0449	0.3601	N/A	N/A
Panel Edge	2.7580	0.4857	N/A	N/A
Panel Core (PE.thm)	2.5888	0.4559	N/A	N/A
Door Lite Sill Option 1	2.8372	0.4997	3.2705	0.5760
Door Lite Sill Option 2	2.8217	0.4969	3.0615	0.5392
Door Lite Sill Option 3	2.7911	0.4915	2.6284	0.4629
Door Lite Sill Option 4	2.7675	0.4874	2.2718	0.4001
Door Lite Head Option 1	2.8375	0.4997	3.2705	0.5760
Door Lite Head Option 2	0.8219	0.4970	3.0613	0.5391
Door Lite Head Option 3	2.7914	0.4916	2.6281	0.4628
Door Lite Head Option 4	2.7677	0.4874	2.2715	0.4000
Door Lite Jamb Option 1	2.8372	0.4997	3.2705	5760
Door Lite Jamb Option 2	2.8217	0.4969	3.0615	0.5392
Door Lite Jamb Option 3	2.7911	0.4915	2.6284	0.1629
Door Lite Jamb Option 4	2.7675	0.4874	2.2718	0.4001

The following table shows the dimensions of the frame and edge portions of each cross section. These dimensions will be used later to determine total product U-factors.

Table 9-28. Frame and Edge dimensions.

	Frame Height		Edge Height	
Cross Section	**mm**	**inch**	**mm**	**inch**
Head	22.225	0.875	63.500	2.500
Jamb	22.225	0.875	63.500	2.500
Sill	39.696	1.563	63.500	2.500
Door Core	N/A	N/A	N/A	N/A
Panel Edge	25.400	1.000	76.597	3.016
Panel Core	N/A	N/A	N/A	N/A
Door Lite	42.063	1.656	63.500	2.500

The figures on the following pages show the THERM cross sections and U-factor results for this window.

Sill

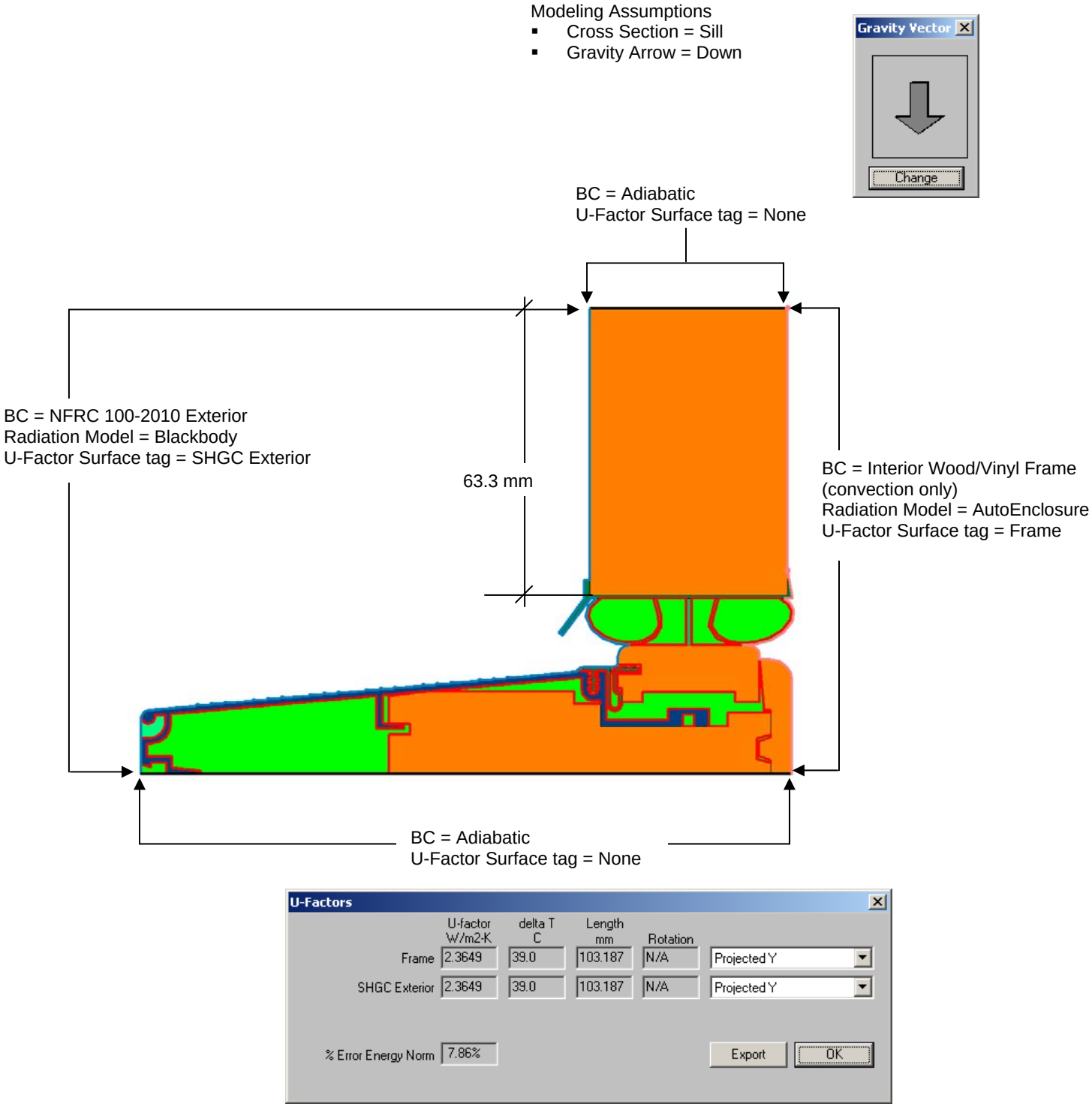

Figure 9-45. THERM cross section and U-factor results for the sill cross section.

Jamb

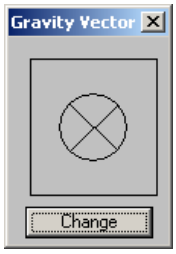

Modeling Assumptions:
- Cross Section = Jamb
- Gravity Arrow = Into the screen

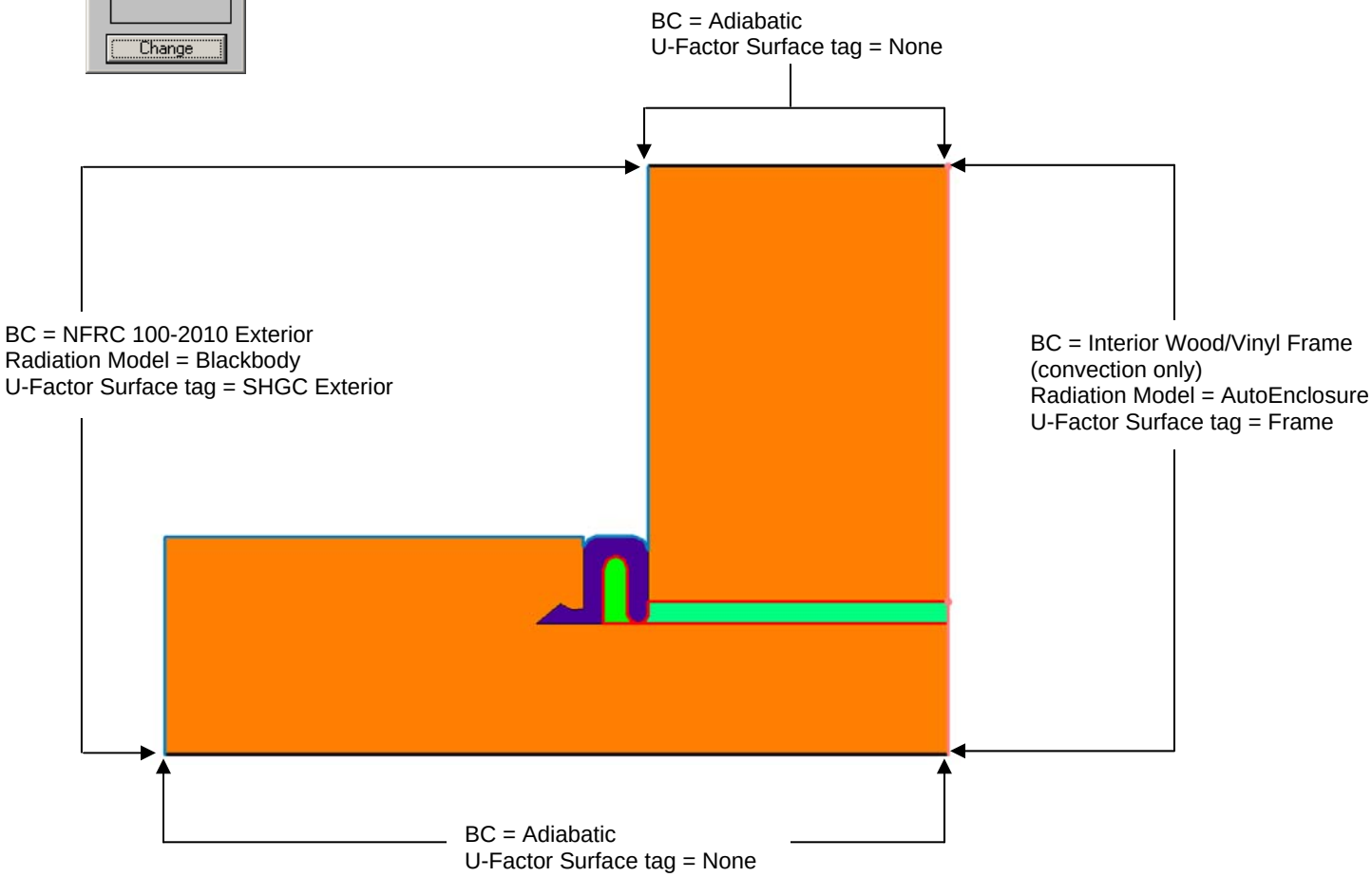

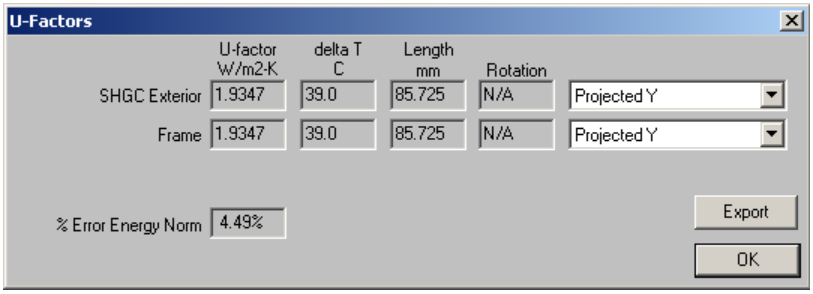

Figure 9-46. THERM cross section and U-factor results for the jamb cross section.

Head

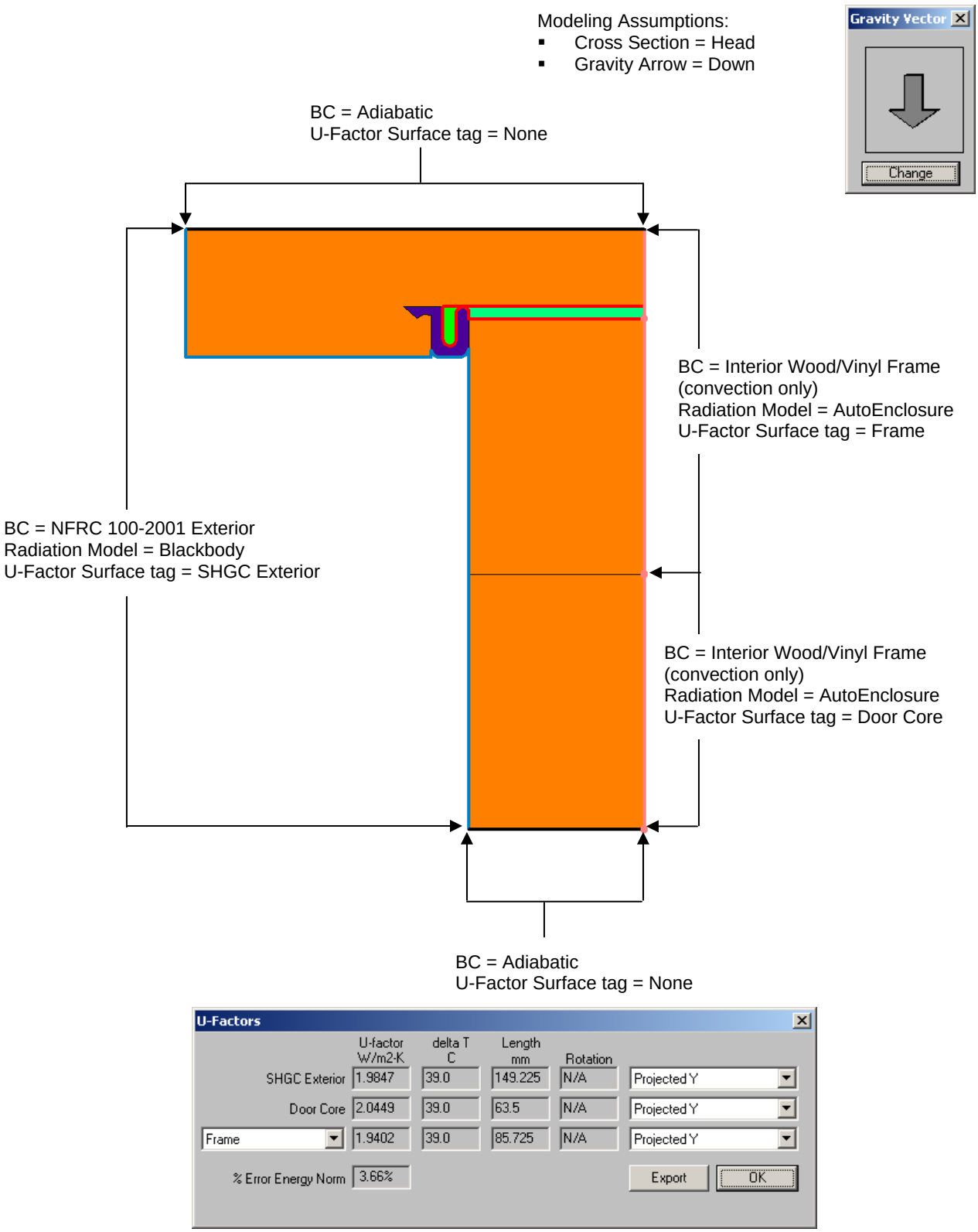

U-Factors

	U-factor W/m2-K	delta T C	Length mm	Rotation	
SHGC Exterior	1.9847	39.0	149.225	N/A	Projected Y
Door Core	2.0449	39.0	63.5	N/A	Projected Y
Frame	1.9402	39.0	85.725	N/A	Projected Y
% Error Energy Norm	3.66%				

Export OK

Figure 9-47. THERM cross section and U-factor results for the head cross section.

Panel Edge

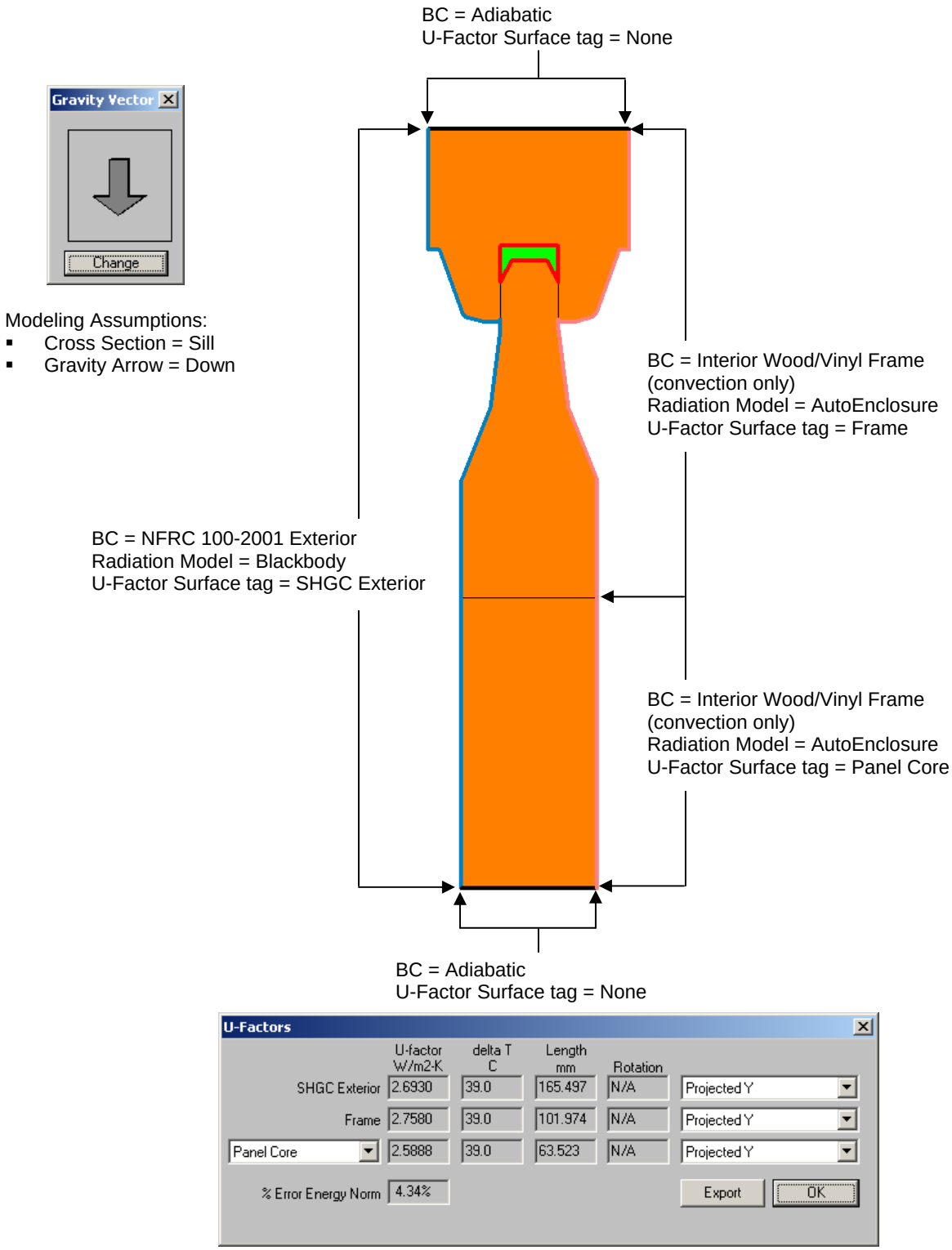

Figure 9-48. THERM cross section and U-factor results for the panel edge cross section.

Door Lite -- Sill

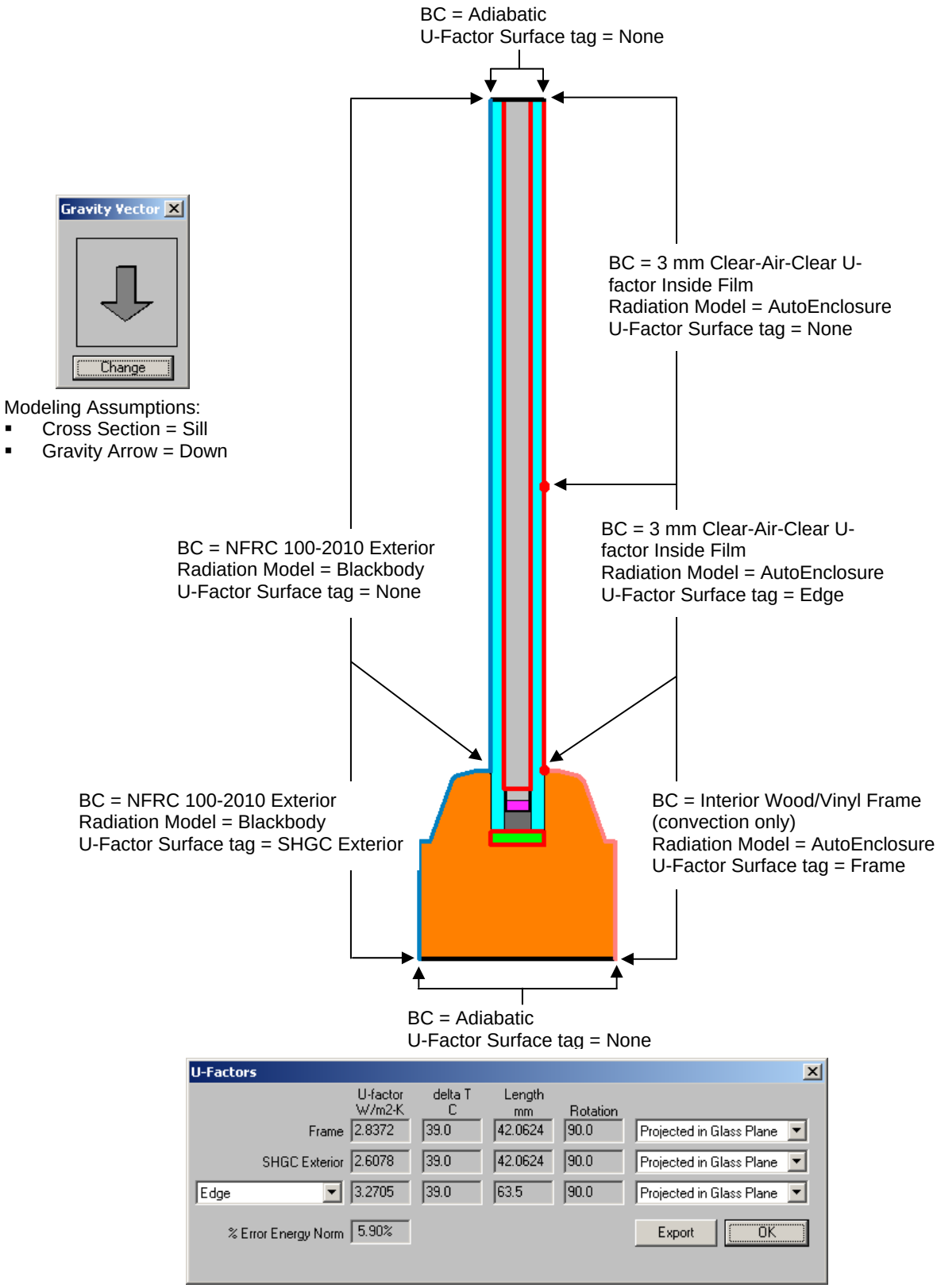

U-Factors

	U-factor W/m2-K	delta T C	Length mm	Rotation	
Frame	2.8372	39.0	42.0624	90.0	Projected in Glass Plane
SHGC Exterior	2.6078	39.0	42.0624	90.0	Projected in Glass Plane
Edge	3.2705	39.0	63.5	90.0	Projected in Glass Plane

% Error Energy Norm 5.90%

Export OK

Figure 9-49. THERM cross section and U-factor results for the door lite cross section.

Door Lite -- Head

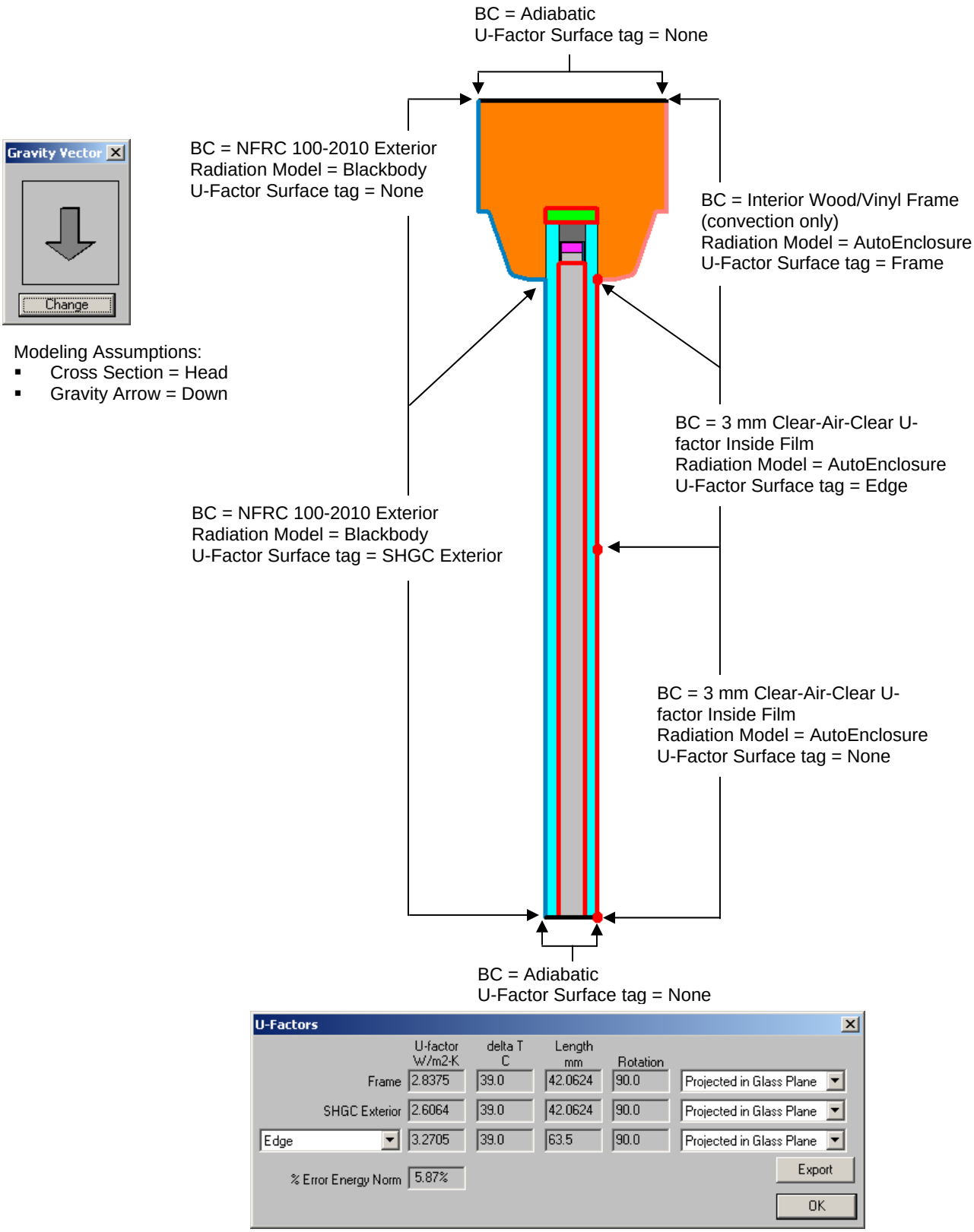

U-Factors

	U-factor W/m2-K	delta T C	Length mm	Rotation	
Frame	2.8375	39.0	42.0624	90.0	Projected in Glass Plane
SHGC Exterior	2.6064	39.0	42.0624	90.0	Projected in Glass Plane
Edge	3.2705	39.0	63.5	90.0	Projected in Glass Plane

% Error Energy Norm 5.87%

Export

OK

Figure 9-50. THERM cross section and U-factor results for the door lite cross section.

Door Lite -- Jamb

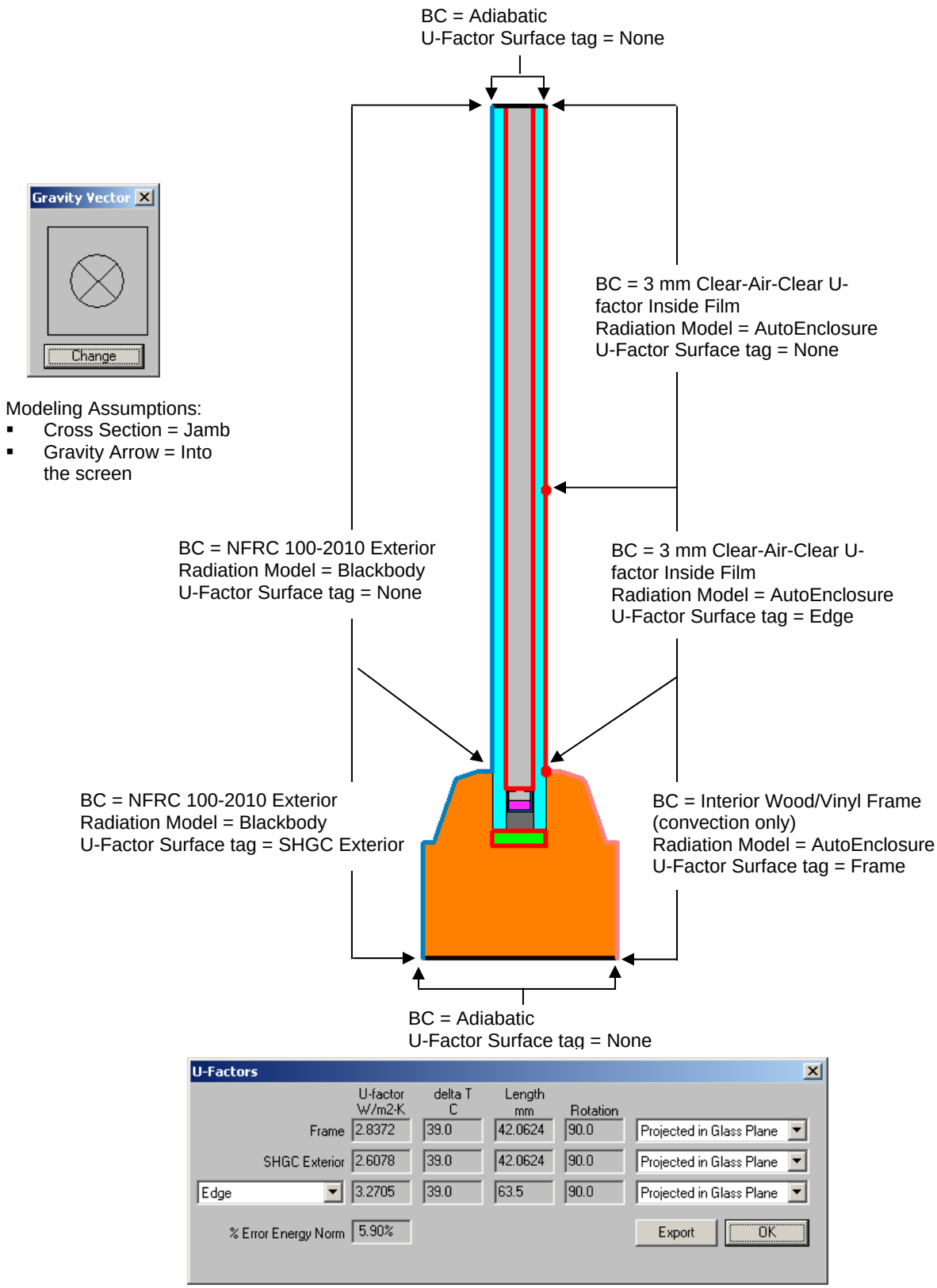

U-Factors

	U-factor W/m2-K	delta T C	Length mm	Rotation	
Frame	2.8372	39.0	42.0624	90.0	Projected in Glass Plane
SHGC Exterior	2.6078	39.0	42.0624	90.0	Projected in Glass Plane
Edge	3.2705	39.0	63.5	90.0	Projected in Glass Plane

% Error Energy Norm 5.90%

Export OK

Figure 9-51. THERM cross section and U-factor results for the door lite cross section.

9.5.5. Total Product U-Factor, SHGC and VT

Total product U-factor, SHGC and VT values for door products cannot be calculated in the same manner as window and skylight products. Because WINDOW cannot area-weight the opaque portions of the door models, and cannot read the results from THERM files with tags other than “Frame”, “Edge” or “None”, total product values must be manually calculated outside of WINDOW, by inputting the center-of-glazing results from WINDOW and the frame and edge results from THERM into a spreadsheet. The spreadsheet calculation is outside the scope of this manual, and is therefore not included in this example.

9.5.6. Wood Stile and Rail Door Drawings.

The following pages contain detailed drawings for this door.

Half-Panel with Glass Layout

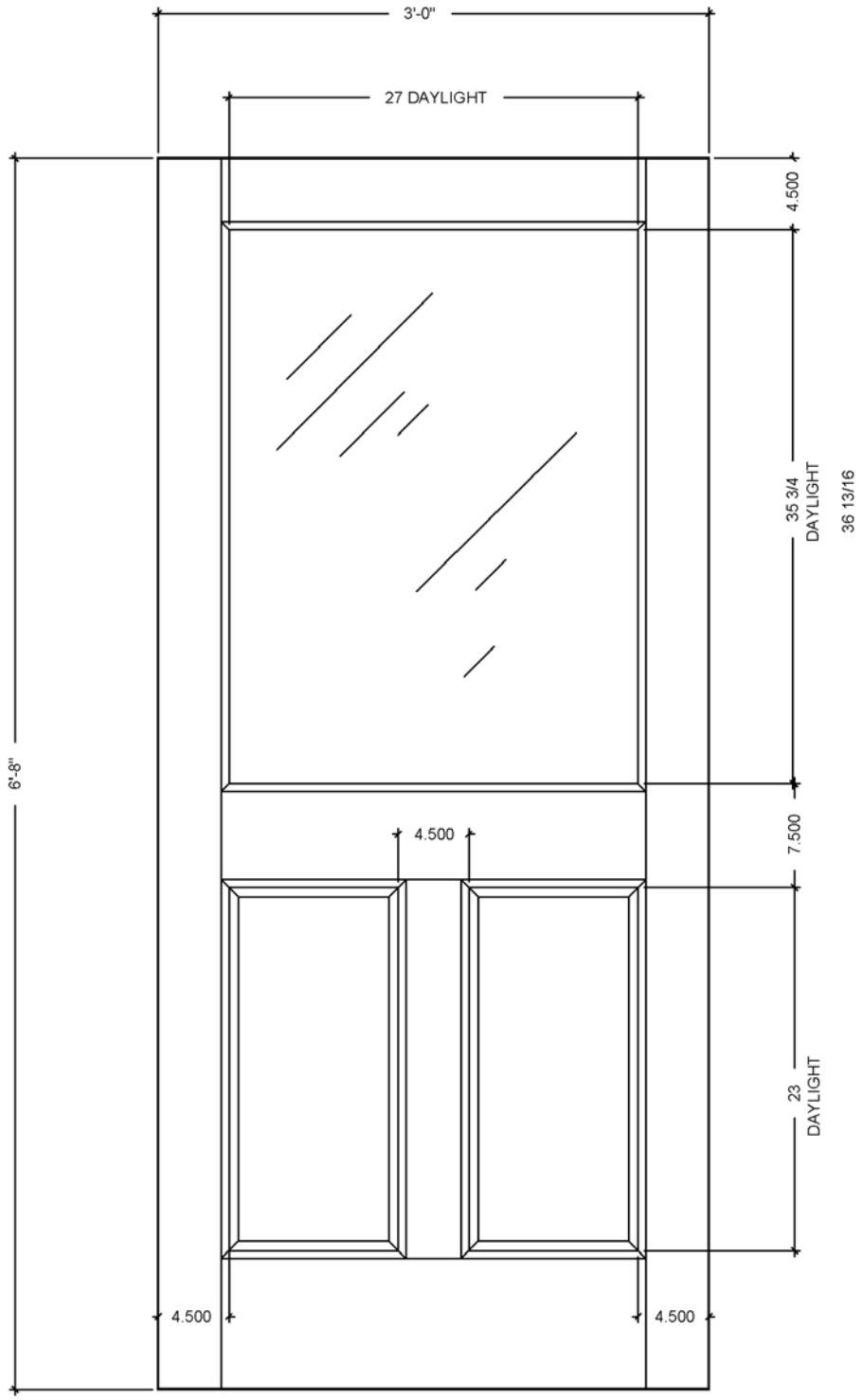

Figure 9-52. Half-Panel with Glass Layout.

Half-Panel with Glass Section

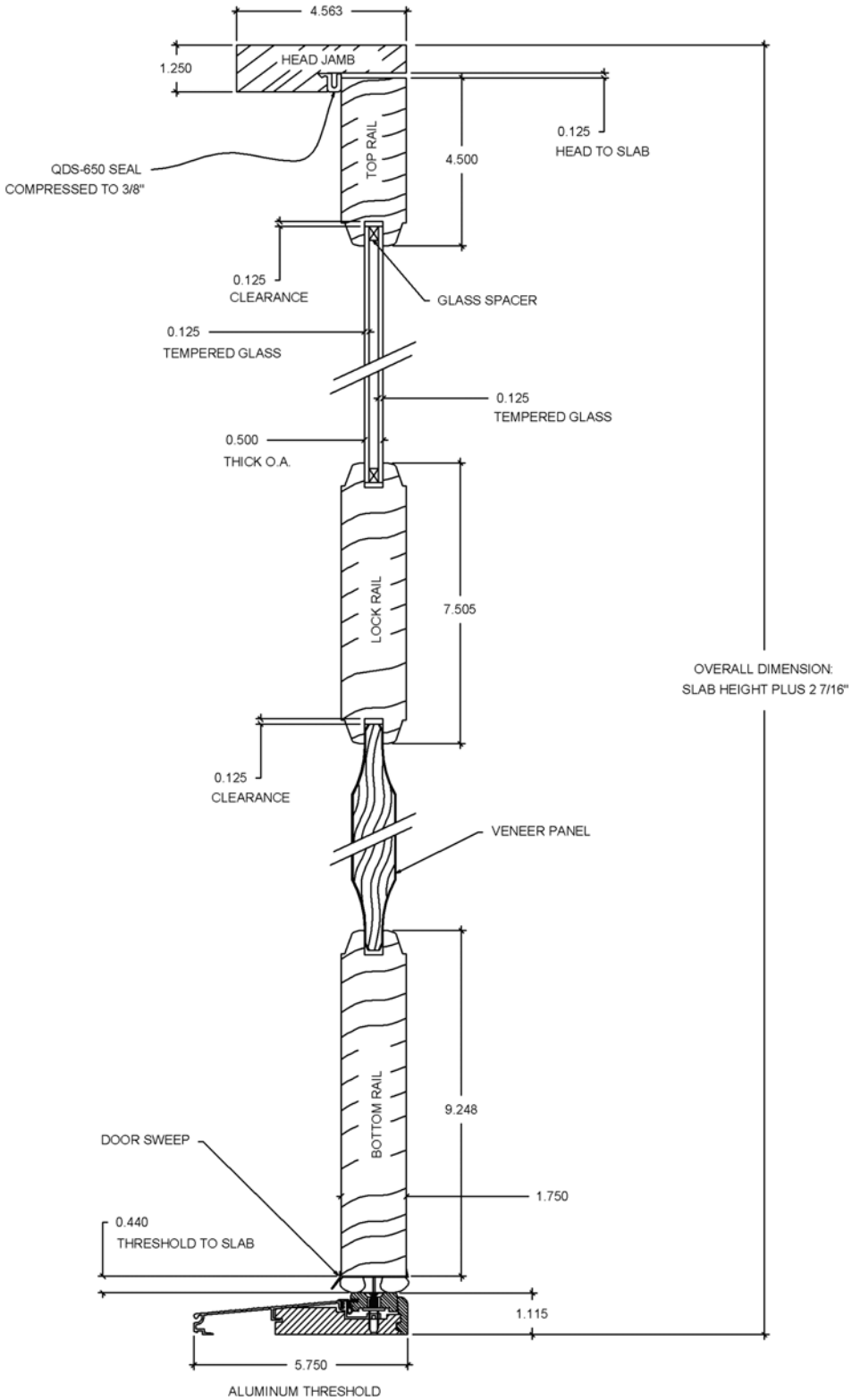

Figure 9-53. Half Panel with Glass Vertical Section.

Half-Panel with Glass Section

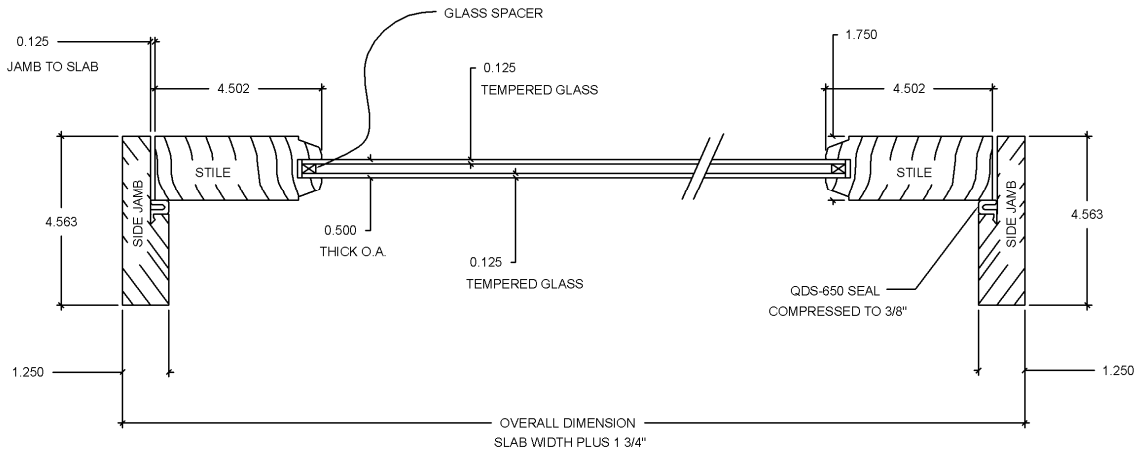

UPPER HORIZONTAL CROSS SECTION

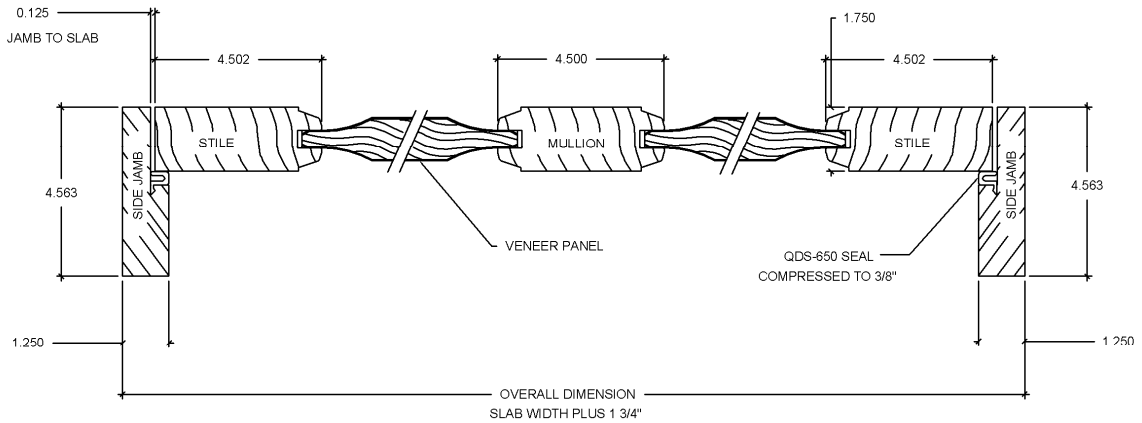

LOWER HORIZONTAL CROSS SECTION

Figure 9-54. *Half Panel with Glass Horizontal Section.*

Sill

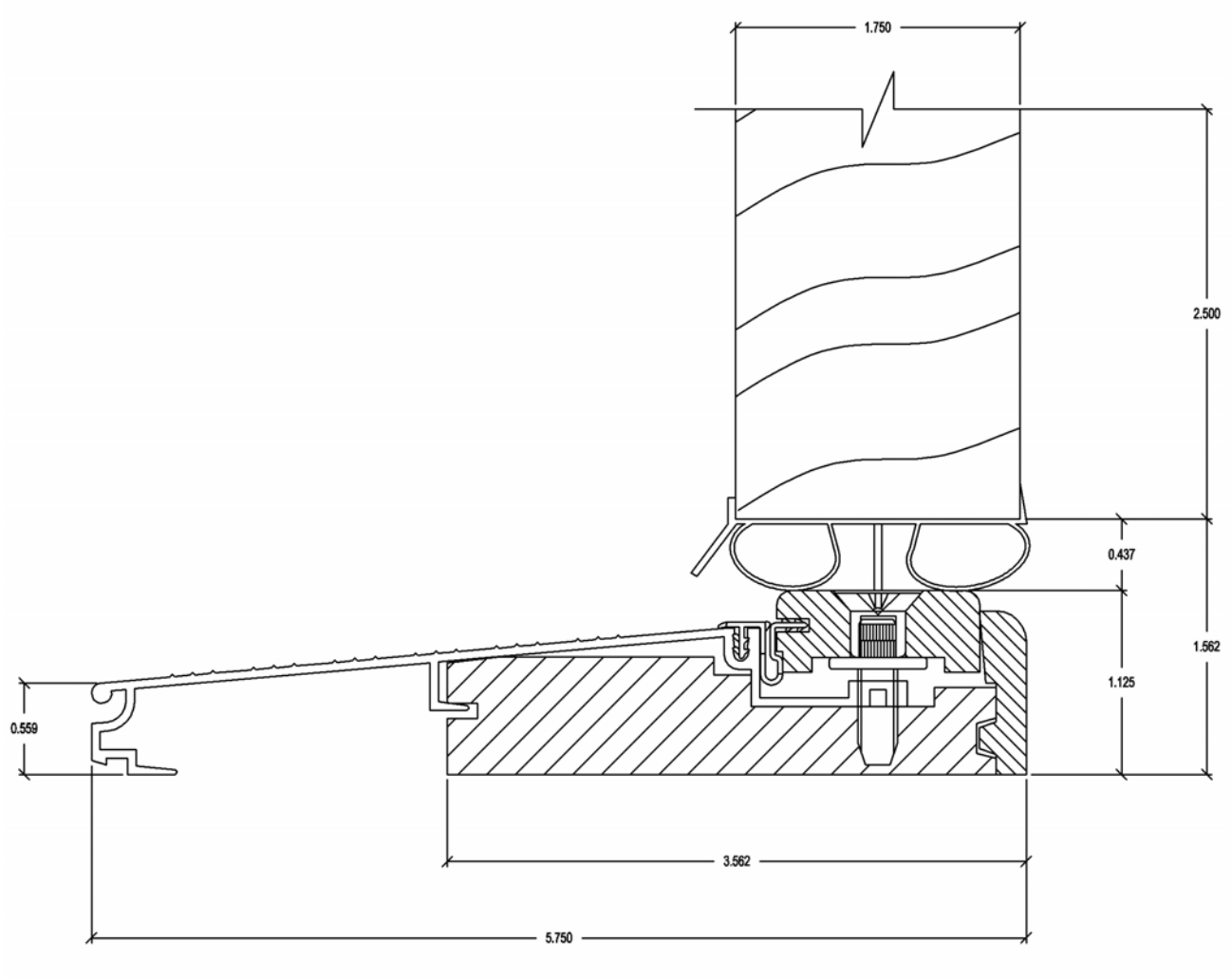

Figure 9-55. Dimensioned drawing for the sill cross section.

Jamb

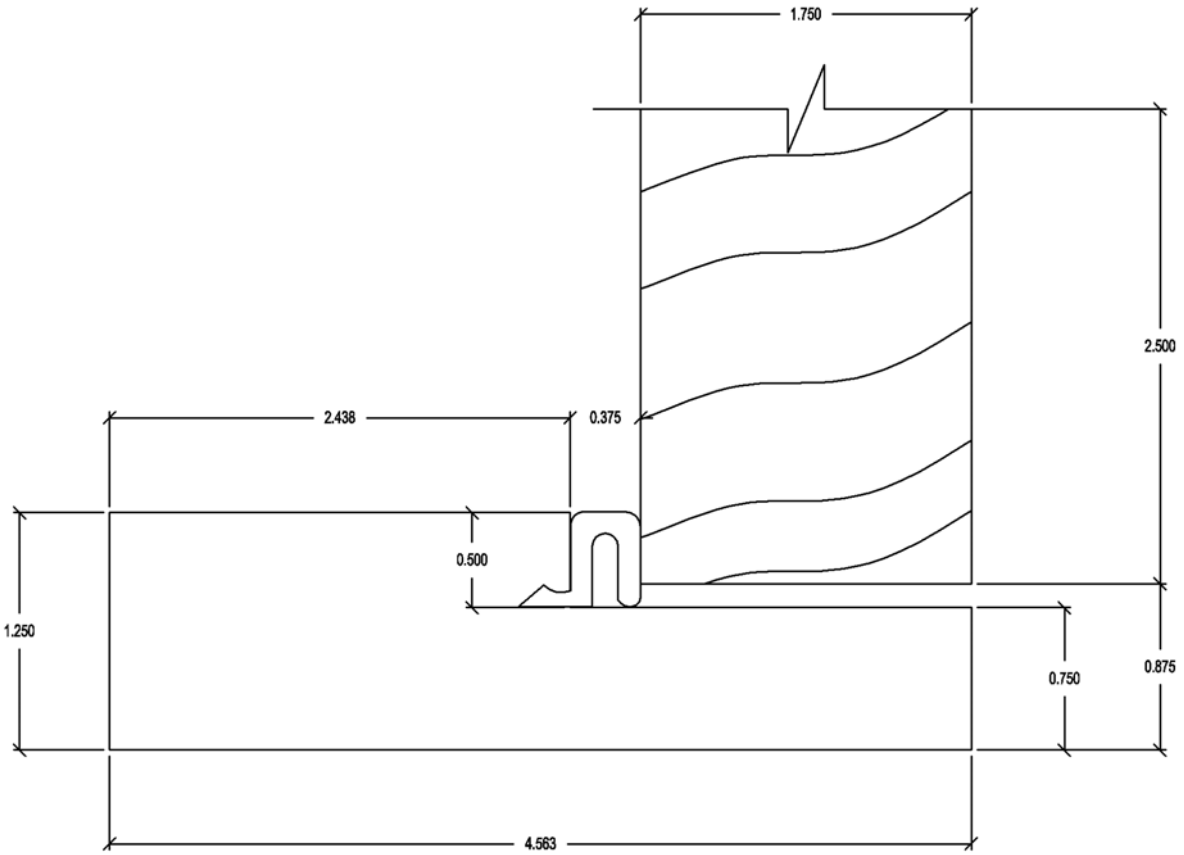

Figure 9-56. Dimensioned drawing for the jamb cross section.

Head

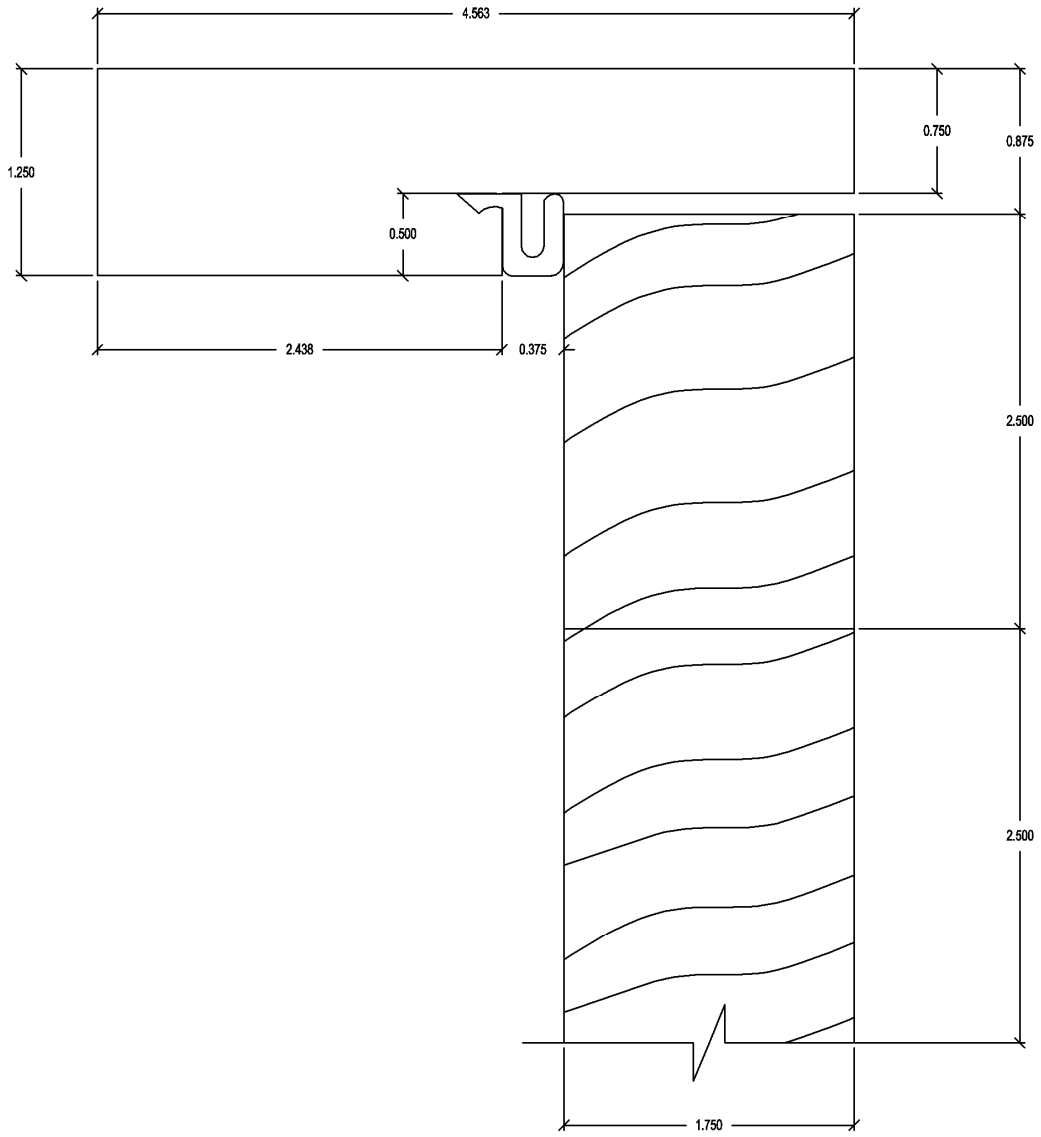

Figure 9-57. Dimensioned drawing for the head cross section.

Panel Edge

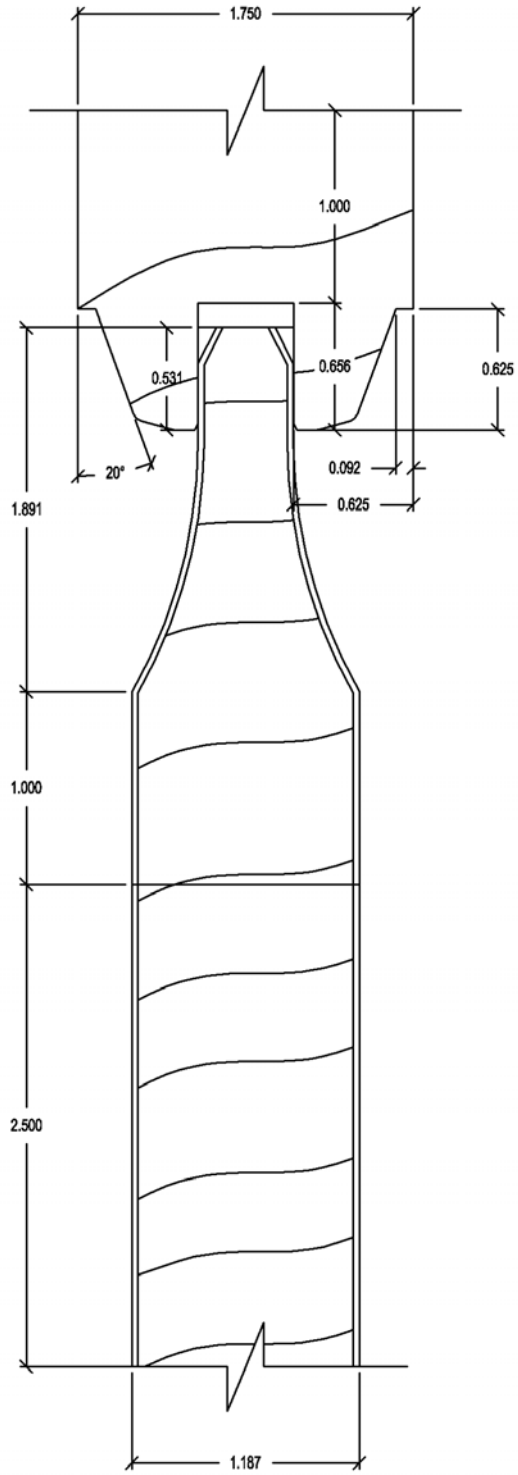

Figure 9-58. Dimensioned drawing for the panel edge cross section.

Door Lite

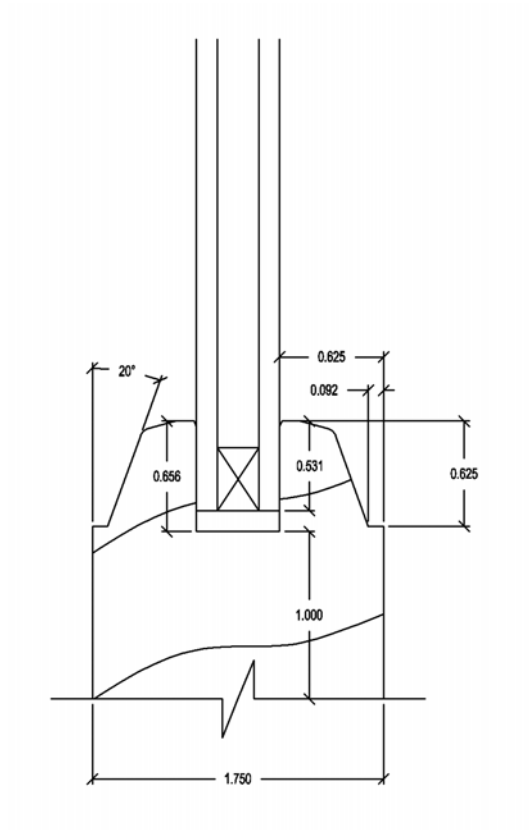

Figure 9-59. Dimensioned drawing for the door lite cross section.

Spacer

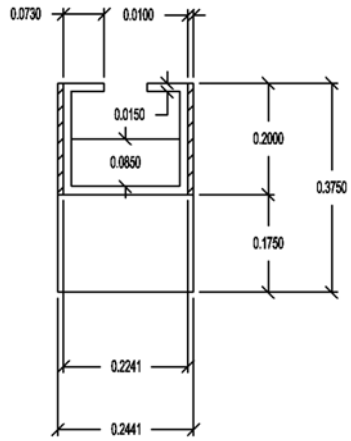

Figure 9-60. Dimensioned drawing for the spacer.