HIGHLY INSULATING WINDOW SYSTEMS
COMBINED PROGRESS REPORT ON
PROTOTYPE DESIGNS
& PERFORMANCE CRITERIA
MAY 1, 2004

Overall Goal

Reduce heating energy losses from residential window units by developing non-structural, insulating, central glazing layers that lower window U-values to 0.1 Btu/(h-ft^2-F) while maintaining appropriate solar heat gain characteristics to meet the requirements of zero-energy homes. Design central glazing layers that are lightweight, thin, and do not significantly increase manufacturing costs relative to costs for other high-performance windows.

Background

Approximately two quads of annual heating energy use in the United States are attributable to heat loss through residential windows. Even if all existing residential windows were replaced with currently available energy-efficient (ENERGY STAR™) windows, the heating consumption attributable to residential windows would still be more than one quad. Current strategies used to reduce heat loss through windows are triple or quadruple glazing, which adds significant weight, or suspended films, which are costly. Because of these weight and cost disadvantages, very highly efficient multi-layer, low-emissivity (low-E) or gas-fill window products account for less than one percent of today's window sales.

Project Schedule

This is the first progress report for Year 1 of this three-year project. The project outline is as follows:

2004 Plans

The project includes two tasks for FY 2004:

1. Finalizing the design of prototype glazing systems with non-structural center glazing layers

- Define thermal performance criteria, dimensions, and other design characteristics for prototypes, based on literature search and computer simulations
- Research appropriate materials for use in constructing prototypes

2. Building the prototypes

- Explore options for manufacturing prototypes in house or having them fabricated by external sources
- Discuss feasibility of prototype criteria, design concepts, and materials with industry

Planning for the 2004 tasks was initiated in December, and funding was received and the formal work started in January.

2005 Plans

Testing of prototypes.

2006 Plans
Technology transfer activities for prototypes.

Progress as of May 1, 2004
The subsections below describe the prototype performance criteria, refined prototype design details, industry input, materials research and procurement, project planning and management, and literature review to date for this project.

Prototype Performance Criteria
To develop appropriate performance criteria for the highly insulating window prototypes proposed in this project, we began by performing DOE-2 simulations of 2,500 unique combinations of window U-values[1] and solar heat gain coefficients (SHGCs)[2] for each of five cities, Salt Lake City UT, Minneapolis MN, Charleston SC, Riverside CA, and Washington DC, which represent a range of climate conditions in regions of the country where some heating is required during the year. Fifty U-values ranging from 0.02 to 1 Btu/(h-ft^2-F) and fifty SHGC values ranging from 0.02 to 1 were used for the simulations. The 2,500 results for each city are total annual heating (from a gas furnace) and cooling (from air conditioning) energy use values (total value expressed in MBtus) for a 2,000-square-foot single-family residence with 300 square feet of windows distributed equally on all four orientations (i.e., 75 square feet of window area per exterior wall) and standard overhangs (per RESFEN 3.1). All properties of the building other than the window U-value and SHGC were held constant in the simulations. We choose to depict combined annual heating and cooling energy, because although most climates are dominated by either heating or cooling, the lesser factor can still be significant and should not be ignored, as concluded by Sullivan and Selkowitz (1987). A secondary simulation study of the same five cities was conducted with unequal window area distribution. Four cases of energy use data were collected for each city, to provide information regarding the predominant glass area facing South, West, North or East. The distribution of the 300 square-foot glass area was 60% on the predominant side, 10% on the opposite wall, and 15% each on the adjoining walls.

The simulation results with equally distributed glass area are shown as three-dimensional color contour plots for three selected cities, Salt Lake City UT, Minneapolis MN, and Charleston SC (Figures 1-3). These three cities were selected from the initial five cities by removing Washington DC and Riverside because of their similarities to other selected cities. In all of these plots, the intersection of any U-value (from the y-axis) and any SHGC (from the x-axis) is the energy performance (total annual heating and cooling energy use in MBtus) of a residence with the aforementioned design using windows with those two characteristics. The typical energy performances of a number of existing window products – (single- and double-pane clear glass; typical ENERGY STAR; low-solar-gain low-E double pane with argon gas fill, high-solar-gain low-E double pane with argon gas fill; and low-solar-gain low-E triple pane with argon gas fill) – are also shown

[1] U-value is the composite thermal conductance of a window and is the inverse of the R-value, which is a measure of the window's thermal resistance. The lower the U-value, the greater a window's resistance to heat flow (i.e., loss of heat from a building's interior). U-values are expressed in Btu/(h-ft^2-F).

[2] Solar Heat Gain Coefficient (SHGC) indicates the fraction of heat from incident solar radiation (sunlight) that flows through a window by means of optical transmission, as well as absorption and re-radiation and convection. SHGC is expressed as a number between 0 and 1. The lower a window's SHGC, the less solar heat the window transmits (i.e., the less heat the window will add to a building's interior).

on each plot along with the expected performance of a representative prototype from this project – a moderate-solar-gain low-E triple-glazed window with krypton gas fill and acrylic center layer (all are indicated by small crosses). In addition, each figure shows a target performance region for the proposed highly insulating window prototypes.

The boundaries of the prototype target performance region were established based on technical and aesthetic feasibility, using the performance of currently commercially available high-performance, triple-glazed windows as a benchmark to exceed. The specific rationale for the boundaries is as follows:

- the upper boundary is an equal energy line defined by the energy use of low-solar-gain, low-E, triple-pane windows with argon gas fill, i.e., currently commercially available high-performance, triple-glazed windows; the new products we are designing should exceed this performance benchmark.

- the left boundary restricts SHGC to no less than 0.2; windows with a lower SHGC would be too dark to be aesthetically acceptable to homeowners.

- the right boundary restricts SHGC to no more than 0.52, which corresponds to the SHGC of high-solar-gain, low-E, double-pane windows. It is unlikely that this value will be higher with triple glazing, and a SHGC greater than this value would be undesirable because of its impact on summer peak loads.

- the bottom boundary is defined by a U-value of 0.12 Btu/(h-ft^2-F), which, in a window with a high-performance insulating frame, equates to an R-10/U-0.1 center-of-glass (COG) U-value. We have determined, based on a Window 5 analysis of the theoretical limit of krypton-filled triple-glazed windows with currently available low-E coatings, that this U-value is the lower limit that can reasonably be achieved with triple-glazed windows.

The performance threshold at which a window provides net energy gain for the building rather than net energy loss is demarcated by a line (not visible on Figure 3 as explained below). We established this baseline energy use line by simulating the aforementioned 2000 square-foot house with no heat flow through the windows, i.e., the SHGC and U-value properties of the windows were set to zero, representing perfect thermal resistance, with no solar transmittance. For zero-energy homes to become a reality, it is desirable that windows provide a net source of energy gain, to the extent that this is practical in various climates. Admitting solar heat gain during the heating season to reduce the need for furnace operation is the only means for improving upon the energy consumption calculated for the baseline windowless house. However, the solar gains associated with the windows during the cooling season must not outweigh the energy saved on heating and the thermal resistance of the windows must be high enough to reduce the thermal losses to less than the solar gains. For the purposes of a zero energy house, it is also useful to note that windows bring another energy asset to the balance. Daylight admitted through windows reduces the consumption of energy for lighting, however this factor was not included in our analysis.

In Salt Lake City and Minneapolis (Figures 1 and 2), the target performance region for the highly insulating prototypes comes close to the line that separates windows as energy losers from windows as energy gainers. Although the target performance region does not extend to a point at which windows become a source of energy gain, it nonetheless

represents a significant improvement over the performance of typical ENERGY STAR windows. (It is important to note that window performance depends on a number of factors including orientation; identical windows will yield different annual energy consumption when the same glass area is redistributed about the house, as we will see below in Figure 6, which shows that windows predominately on southern orientations in Minneapolis could easily become net energy gainers for the house.)

In Figure 3, total annual energy use for Charleston SC, the line demarcating net energy gain/loss, which would be at 36 MBtu, is not visible. Charleston has the highest cooling demand of the cities we studied, and the significant impact of solar heat gain through windows during the substantial summer cooling season there cannot be offset by the reduced heating use attributable to solar heat gain through windows during the much more modest heating season. However, although solar gain is unwelcome in Charleston in the summer it is still important for reducing winter heating use, even in such a cooling-dominated climate. Figure 4, which shows annual heating energy use only, demonstrates the importance of winter solar heat gain in Charleston. This figure shows that, in heating season only, the representative prototype with acrylic center layer is well within the region in which windows provide more energy than they lose, highlighting windows' ability to be sources of energy gain (note that, for this simulation of heating energy use only, the line at which windows shift from energy users to energy gainers is 20 MBtu in contrast to the 36 MBtu line in Figure 3 which shows combined heating and cooling energy use). However, this heating-only simulation neglects the significant impact of solar heat gain on cooling load. The difference between Figures 3 and 4 shows that cooling energy use is a very large component of total annual energy use in Charleston.

Because of the tradeoff between solar heat gain and U-value, the shapes of the target performance regions vary in Figures 1-3. In the heating-dominated climates (Salt Lake City and Minneapolis, Figures 1 and 2) where the positive impact of winter solar heat gain on heating energy use is significant, the slope of the target performance region increases to the right, indicating that the prototypes can have high U-values when SHGC is high. In the cooling-dominated climate (Charleston SC, Figure 3) where the impact of summer solar heat gain on cooling energy costs is significant, the target performance region slopes down toward the right, representing U-values that must decrease as SHGC increases. This variation in the shape of the target performance region makes it clear that the optimal window depends on the type of energy use (heating or cooling) targeted for reduction and that no one window is the best for all climates. In particular, although highly insulating, moderate-solar-gain windows appear to perform well in the heating-dominated climates of Salt Lake City and Minneapolis, and even Charleston's mild heating demands can benefit from solar gains in the winter, some kind of solar heat gain control is necessary in the summer in cooling-dominated climates like Charleston's. To explore this possibility, we studied the impact of adding dynamic solar gain control to our highly insulating prototype in Charleston SC (Figure 5). For this simulation, we assumed that whenever air conditioning is needed, window SHGC will drop to 0.16. (The potential for dynamic windows is explored in detail in Apte et al. 2003, which finds that windows with dynamic solar heat gain properties that vary according to season could also become energy gainers. Readers of Apte et al. 2003 will note that the high-gain SHGC assumed in that paper is lower than the SHGC assumed in the current project, so the predicted window performances in that study differ from those simulated here).

Sullivan and Selkowitz (1987) point out that the optimal window properties depend on a complex interaction among factors such as climate characteristics and window

orientation. To illustrate the impact of window orientation on annual energy consumption, results for Minneapolis, in which 60% of the 300 square-foot glass area faces south, are presented in Figure 6. As noted earlier, this figure shows that the proposed prototype easily becomes a source of energy gain under these circumstances, suggesting that careful attention to window orientation in architectural design increases the likelihood that high performance windows will contribute net energy gain to the building.

In sum, our simulations show that in heating dominated climates, a static, high-solar-gain, highly insulating (triple) window can nearly meet the net energy gain criteria desired for zero-energy homes, when no special attention is paid to window orientation, while this same window can easily exceed the criteria with careful orientation design. In cooling-dominated climates, some added means of seasonal dynamic solar gain control (e.g., by manual or automated shades, electrochromics, overhangs or deciduous trees) will be necessary for the prototypes in this study to avoid consuming more energy than they gain.

Prototype Designs

We have refined the designs of some of the proposed advanced center layers in the highly insulating prototypes that were described in the original proposal for this project. (The five original proposed prototype designs are shown in Appendix A, Figures A2 – A6). The V-shaped center layer that is part of the original proposed prototype #3 (Figure A4) has been refined so that it will have edges that are folded 90 degrees to improve sheet stiffness in large windows (Figure 7). Another variant of this design may include two acrylic layers parallel to the glass plane folded out of a single sheet (Figure 8). The S-shaped center layer in the original proposed prototype #2 (Figure A3) will be more stable inside the glazing unit cavity with a tab folded in both directions at top and bottom (Figure 9).

We decided to design prototypes that represent a range of cost points in the windows market, which logically entails a tradeoff with performance. That is, some prototypes will represent relatively moderately priced windows, which will fall into the less efficient portion of the target performance ranges shown in Figures 1-4, and some will represent high-end products that will fall into the more efficient portion of the target performance ranges. For example, for the Minneapolis target performance range, where annual total energy costs range from $875 to $1,041 (energy costs for a typical ENERGY STAR window are $1,100 per year), simple 10-year paybacks would be $2 per square foot for the less-expensive, lower-performing prototype and $7.50 per square foot for the more-expensive, higher-performing prototype.

In addition, we determined that we need to target not only COG properties but also whole-window properties so that we can make accurate comparisons between the prototypes' performances and the DOE-2 simulation results. We simulated the performance of a commonly available wood-frame window with added insulating properties and a COG U-value of 0.1 Btu/(h-ft^2-F). Figure 10a shows a cross section of a standard wood window, and Figure 10b shows the insulating properties that we added: deeper setting of the window into the frame, foam spacer with divided air space under window. The whole-window performance for a 10 ft.^{2} version of this hypothetical product would be approximately 0.12 Btu/(h-ft^2-F). Increasing the window size to 20 ft.^{2} decreases the U-value by about four percent and increases the solar heat gain by 7.5 percent.

Industry Discussions
We have made use of several opportunities to discuss key aspects of this project with window manufacturers, both through known industry contacts and at the International Builders Show (Las Vegas NV, Jan. 19-20). Window industry representatives offered their perspectives on current high-performance window products and as well as perceptions of current barriers to wide market acceptance of these products. Representatives expressed the desire that any new technology be easily scalable from small divided lights and operable panes to large patio doors.

A discussion with an inert gas vendor, Spectra Gases, yielded information on current argon, krypton, and xenon prices.

Industry representatives highlighted the importance of considering durability in our designs. Concerns included avoiding warrantee claims for the new products, and industry representatives pointed to thermal expansion of plastic center layers and off-gassing of plastic interlayers, which might create a film on the surfaces of the glass panes, as two areas to consider.

Manufacturers were supportive of our proposed use of a single spacer in highly insulating windows. We learned that one manufacturer, Edge Tech, currently manufactures a single spacer designed for use with stained glass inserts; this spacer has a groove that could accommodate a center panel.

Materials Research and Procurement
Through inquiries with float glass manufacturers, we have improved our understanding of the available dimensions and issues associated with the use of thin glass (as in original proposal #1, Figure A2). Because the increased solar transmittance of low-iron glass relative to ordinary glass results lower total annual energy use in heating-dominated climates, we plan to use low-iron glass if recent manufacturing developments sufficiently lower its price to make it economically feasible.

Vendors of anti-reflective (AR) coated acrylic and polycarbonate have been identified in the United States, United Kingdom and Japan, along with two potential production techniques (vacuum sputtering and wet chemistry). We have requested samples for evaluation. Sputtered AR coatings are quite expensive, but simpler wet-chemistry coatings are more economical and might have acceptable optical properties. AR coatings are currently used for small areas in relatively high-priced products, e.g., liquid crystal displays in laptop and handheld computers and cell phones. All vendors contacted have been skeptical that current AR coating technology can meet our desired price point of $1 per square foot.

We procured a roll of 0.5-mil Teflon film, (2 feet by 200 feet) for prototyping of the center layer in original proposal #4 (Figure A5). We also procured a common (0.06-inch) acrylic sheet for the two folded center-layer configurations (original proposals #2 and #3, Figures A3 and A4). Although other thin plastics could be used, we chose Teflon because of the findings of Wright (1987) who concludes, based on simulated and measured data for windows with low-E coatings and Teflon inner glazings, that Teflon has excellent chemical and UV stability, and high solar visibility and IR transmittance. In addition, Teflon is readily available.

We learned that, in addition to Teflon, single crystals of common salts (NaCl and KCl) have the excellent long-wave infrared (IR) transmission and uniformly high-visible transmission that are desirable for a center-layer design using low-E coatings. Application of these materials to affordable windows is currently unresearched; however, to find out whether these materials might be applicable to highly insulating windows, we initiated some discussions with a company that grows and polishes single crystals for use in small apertures in scientific applications where IR transmission is required.

In an effort to assure that our proposed highly insulating window designs do not utilize materials that create environmental hazards or are otherwise associated with excessive life cycle costs, we have begun to research environmental impacts and toxicity associated with acrylic and Teflon.

Planning and Management
We defined project milestones and prepared and submitted to DOE a project Overview and 2004 Milestones document. We also detailed subtasks and goals as described above.

Literature review
We reviewed the following literature as well as the papers cited in the reference list below:

- 1991 invention disclosure for Thermal Insulated Glazing Unit
- Manufacturers' documentation for spacer systems, including documentation for the high-performance Thermal Plastic Spacer (TPS) manufactured and used in Europe
- EPA and Greenpeace research on toxicity and environmental impacts of plastics: polyvinyl chloride, acrylic, polyethylene, Teflon

References

Apte, Josh, Dariush Arasteh, Yu Joe Huang. 2003. "Future Advanced Windows for Zero-Energy Homes." *ASHRAE Transactions* v. 109.

Sullivan, R. and S. Selkowitz. 1987. "Residential Heating and Cooling Energy Cost Implications Associated with Window Type." *ASHRAE Proceedings*, January.

Sullivan, R. and S. Selkowitz. 1985. "Window Performance Analysis in a Single-Family Residence." Buildings III Conference, Clearwater Beach FL, December.

Wright, J.L. and H.F. Sullivan. 1987. "Simulation and Measurement of Windows with Low-Emissivity Coatings used in Conjunction with Teflon Inner Glazings." ISES Solar World Congress. Hamburg, West Germany, Vol. 4: 3136-3140. September.

Figure 1

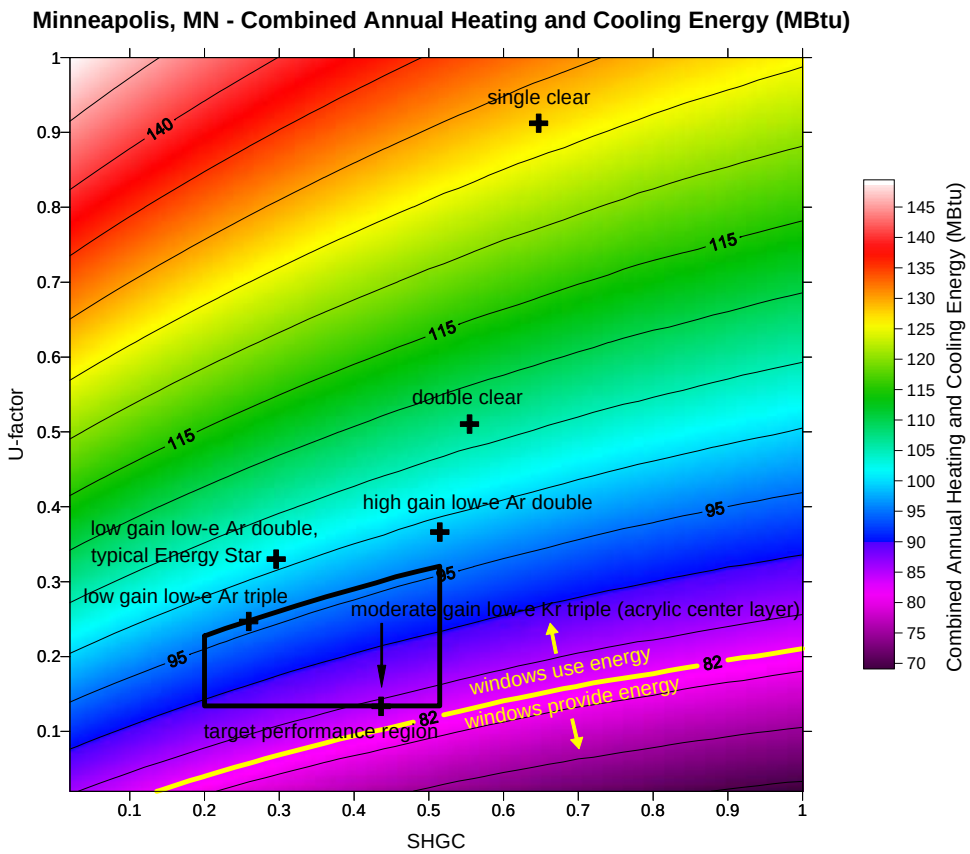

Figure 2

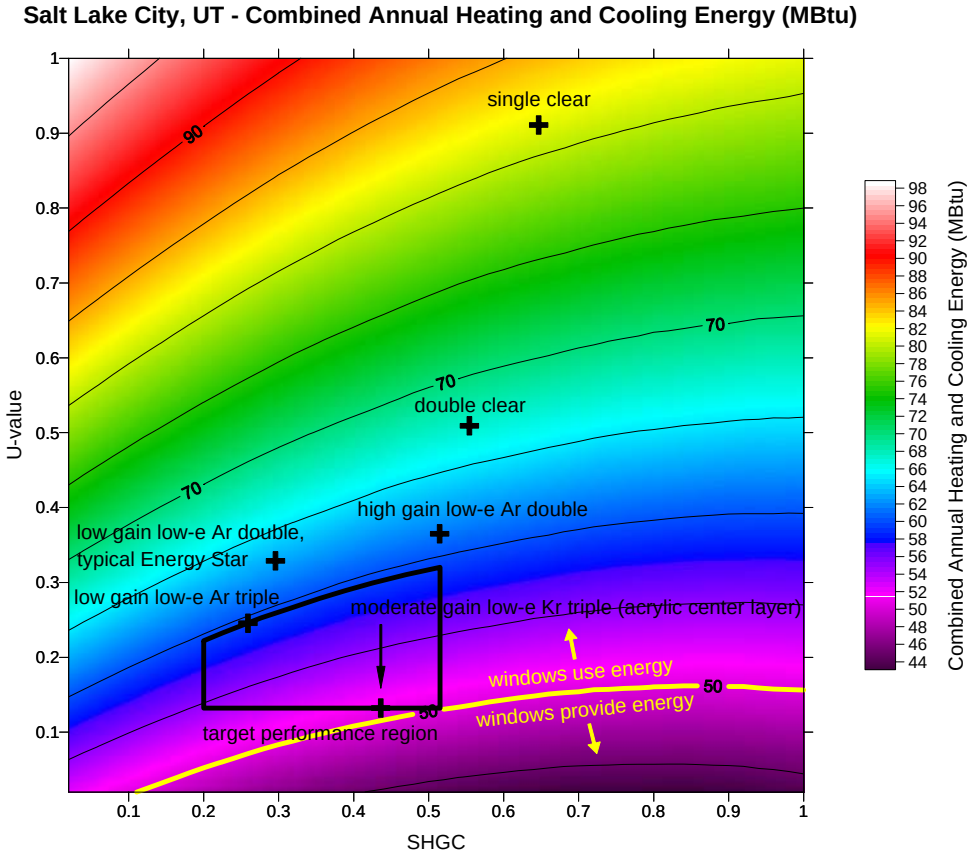

Figure 3

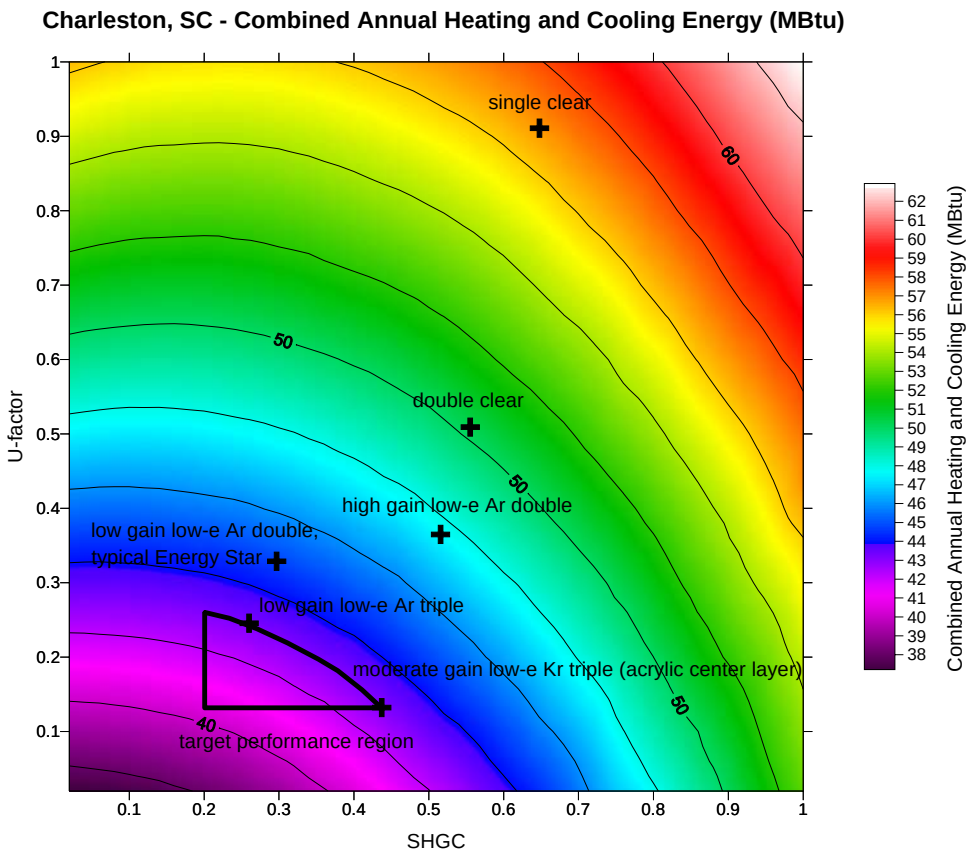

Figure 4

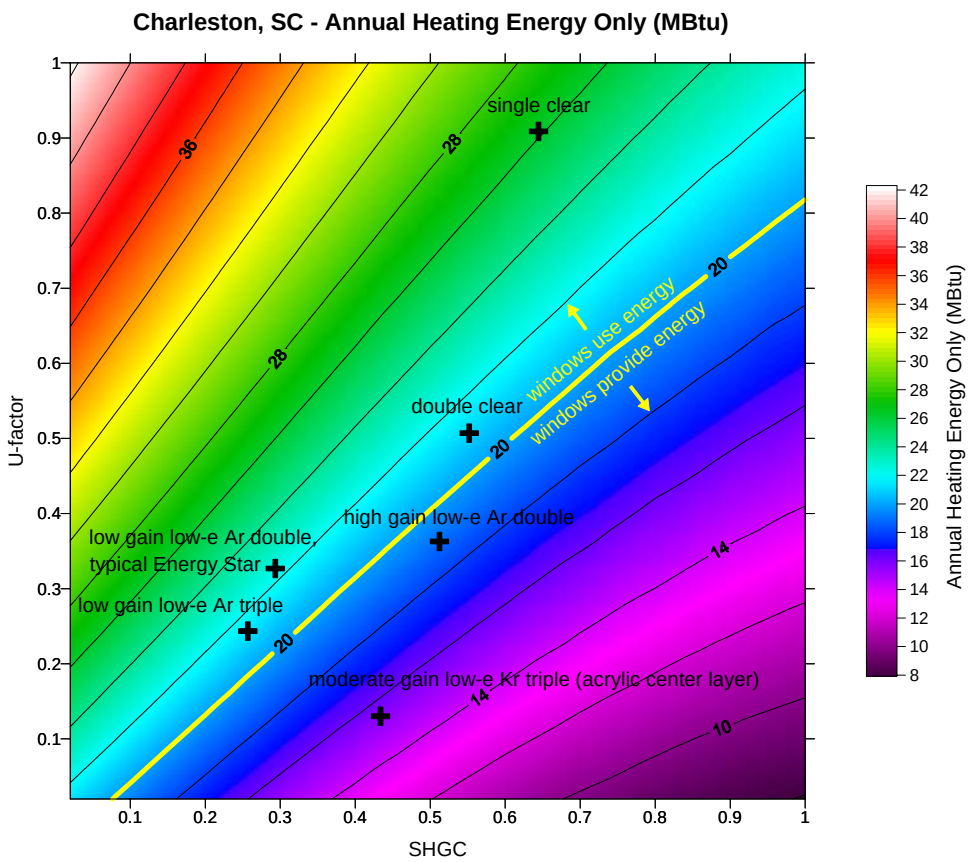

Figure 5

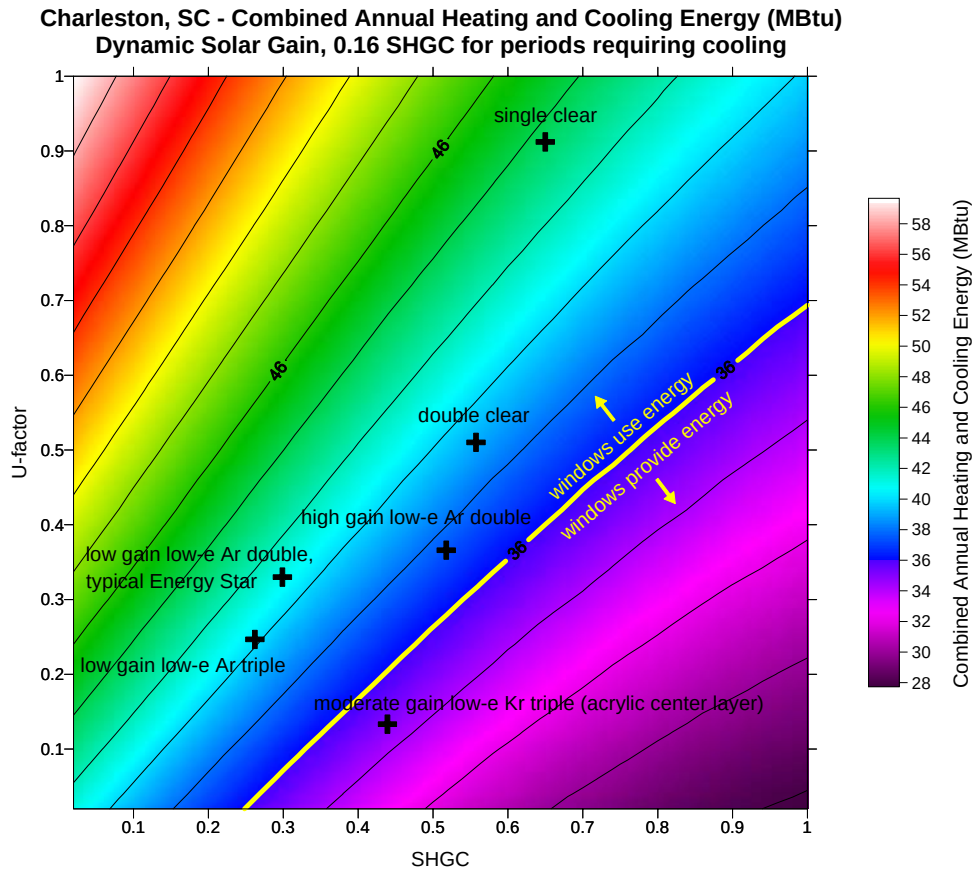

Figure 6

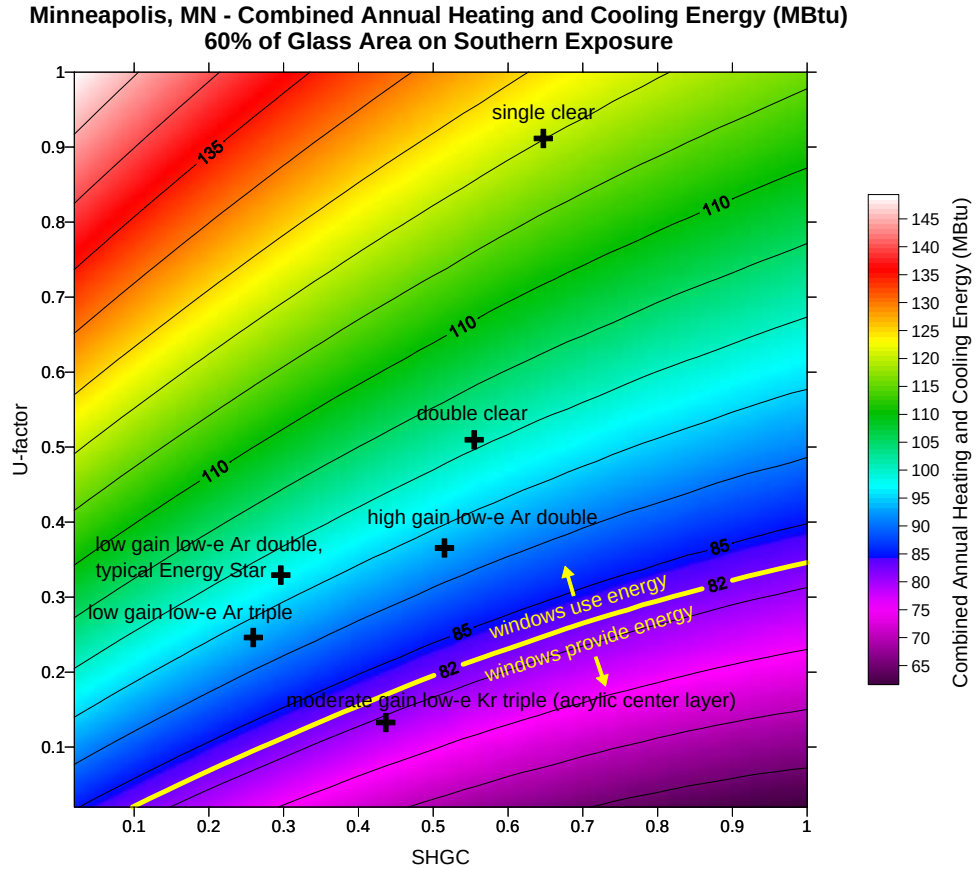

Figure 7

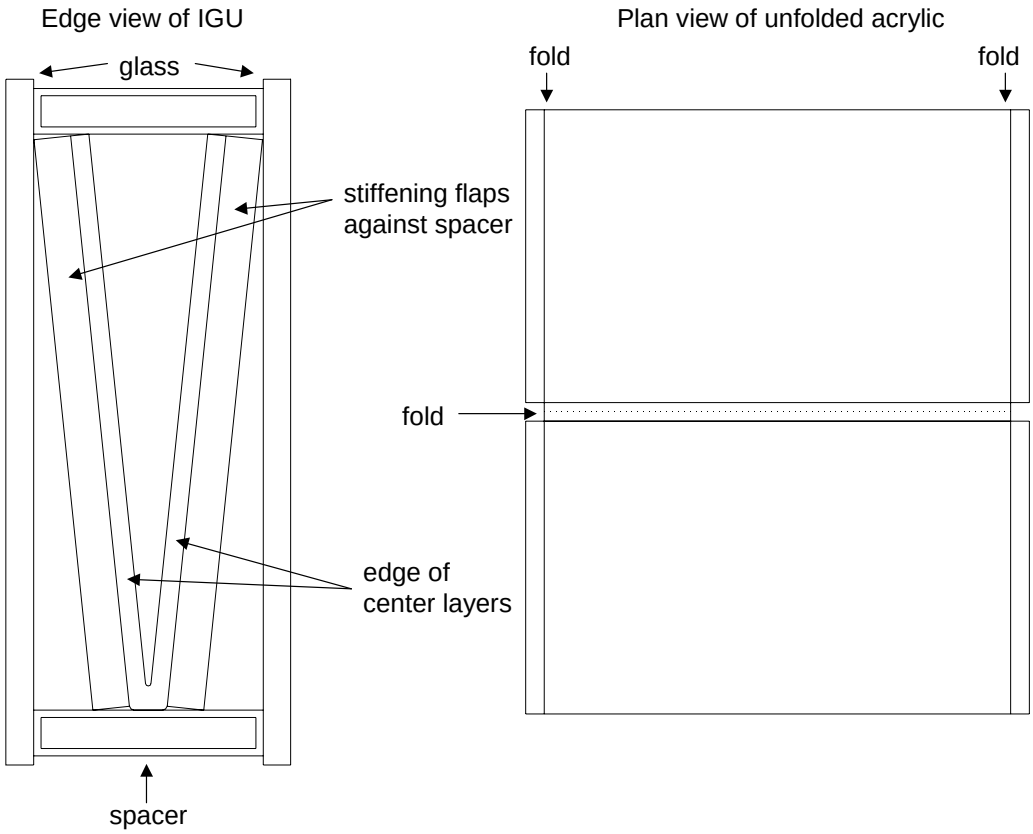

Figure 8

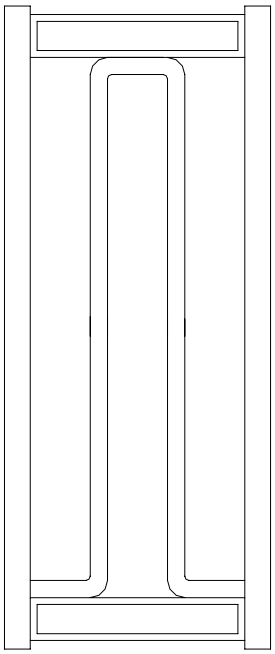

Figure 9

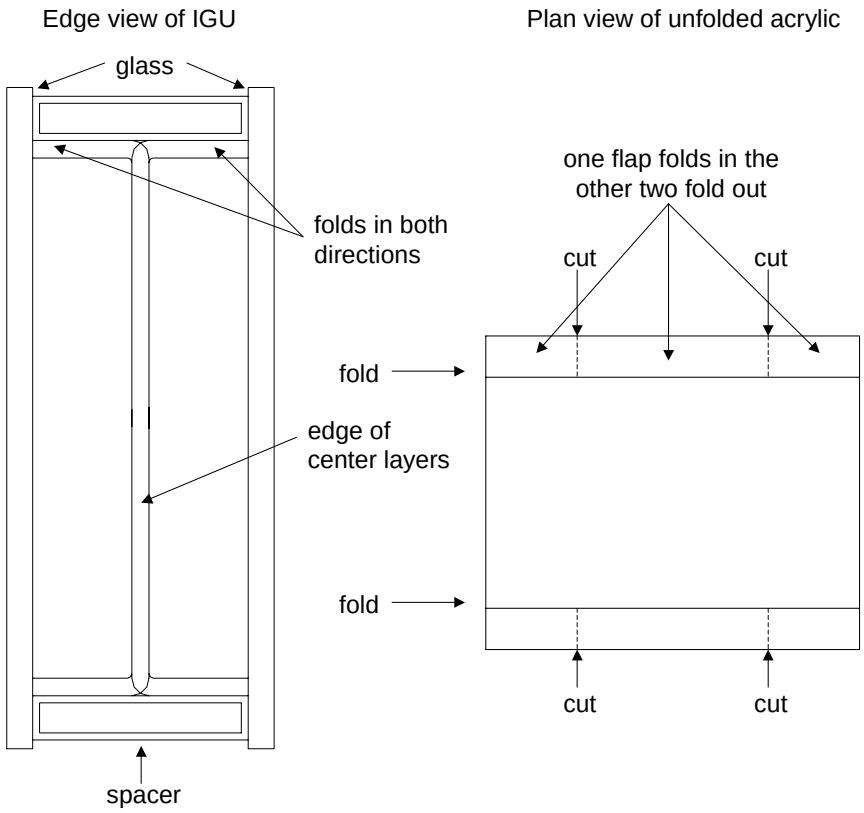
Edge view of IGU
Plan view of unfolded acrylic
glass
folds in both directions
edge of center layers
spacer
one flap folds in the other two fold out
cut
cut
fold
fold
cut
cut

Figure 10a

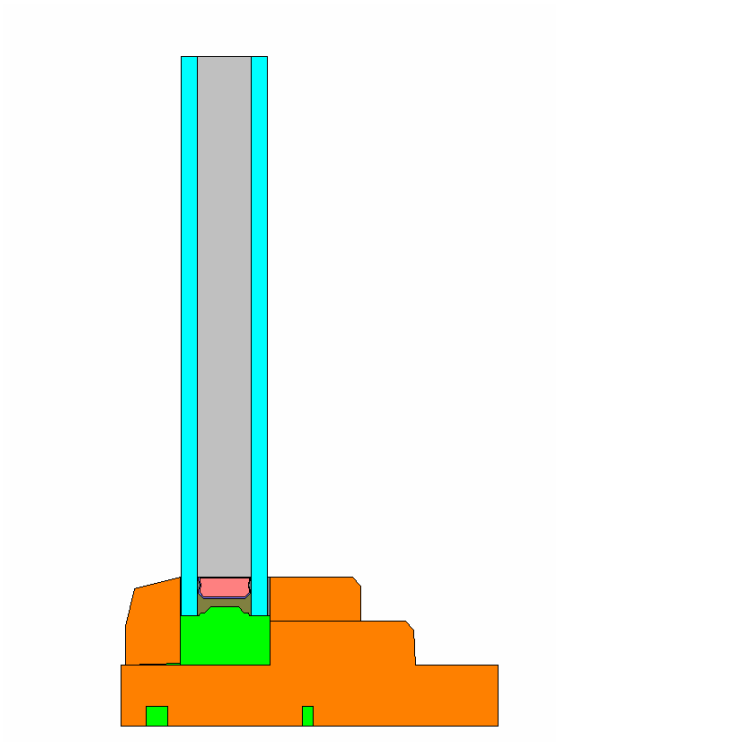

Figure 10b

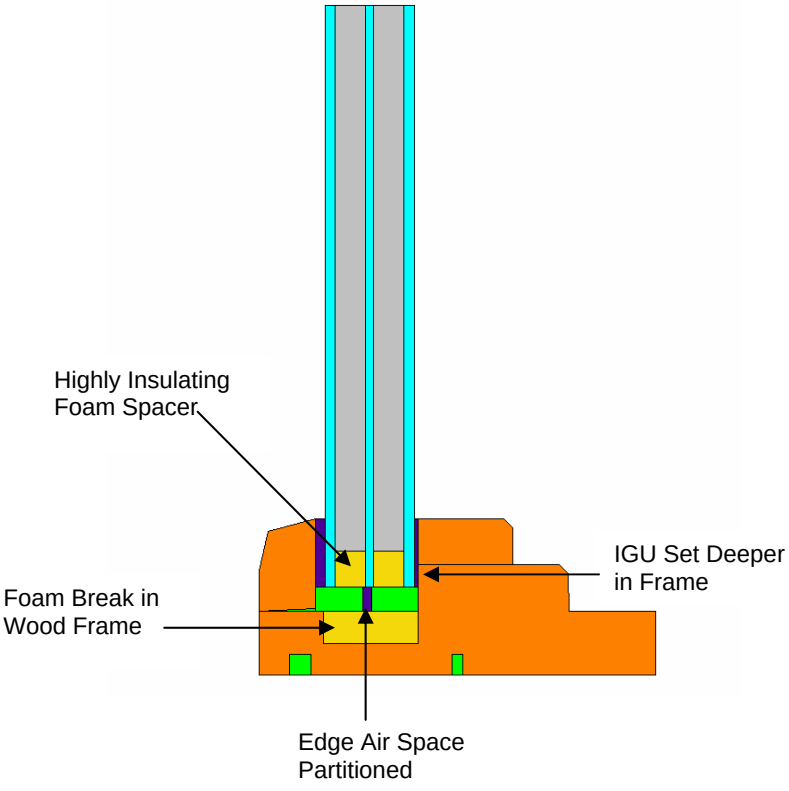

Appendix A:

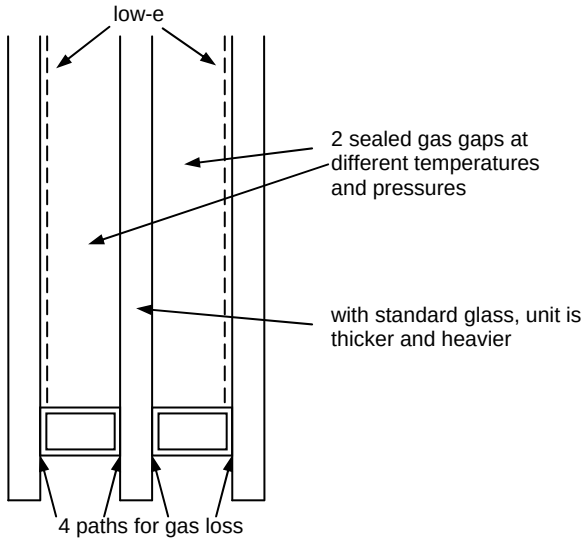

Figure A1 – Current

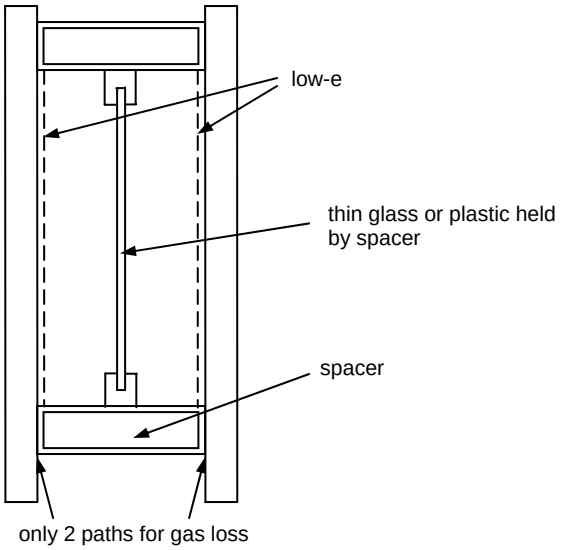

Figure A2 – Proposal #1

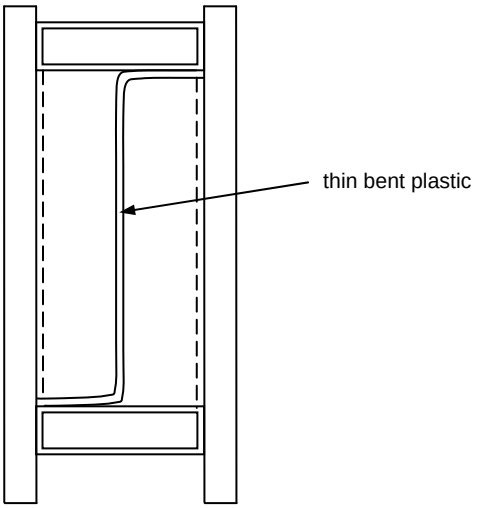

Figure A3 – Proposal #2

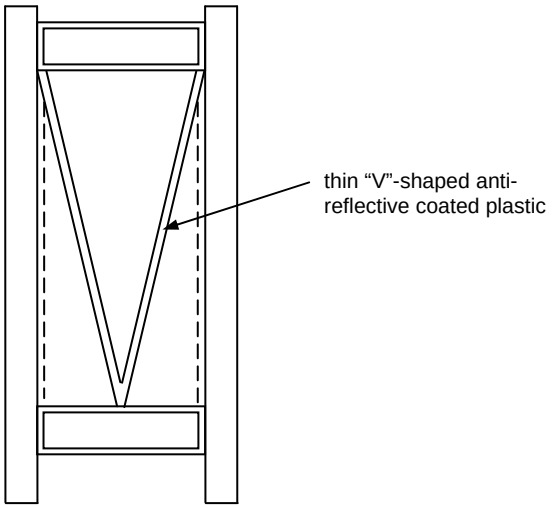

Figure A4 – Proposal #3

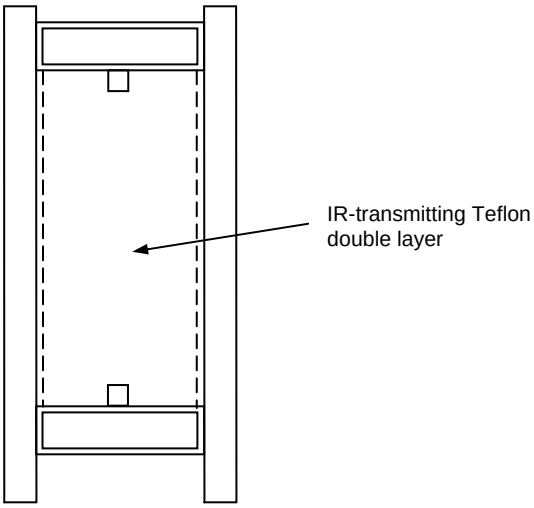

Figure A5 – Proposal #4

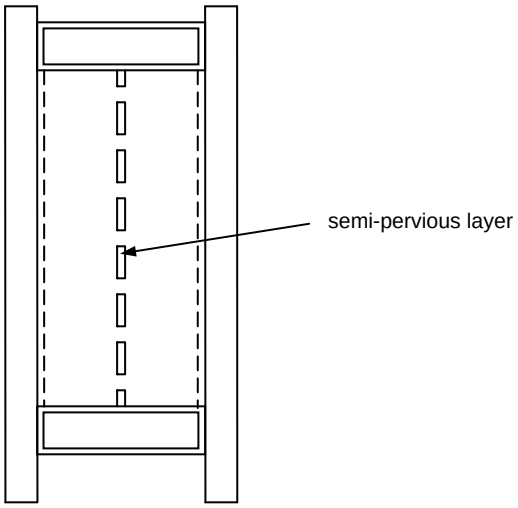

Figure A6 – Proposal #5

Appendix B:

Updated Milestones – March 2004

2004 Milestones

April 1 – complete *Progress Report* on prototype designs

May 1 – finish prototype performance criteria and designs

August 15 – finish first two prototypes
– summary of discussions with manufacturers

November 1 – finish remaining prototypes

December 31 – define testing protocol
– finish testing standard double- and triple-glazed units (without frames) as base cases
– complete *Annual Report*