SAGE SYSTEM ELEVATION

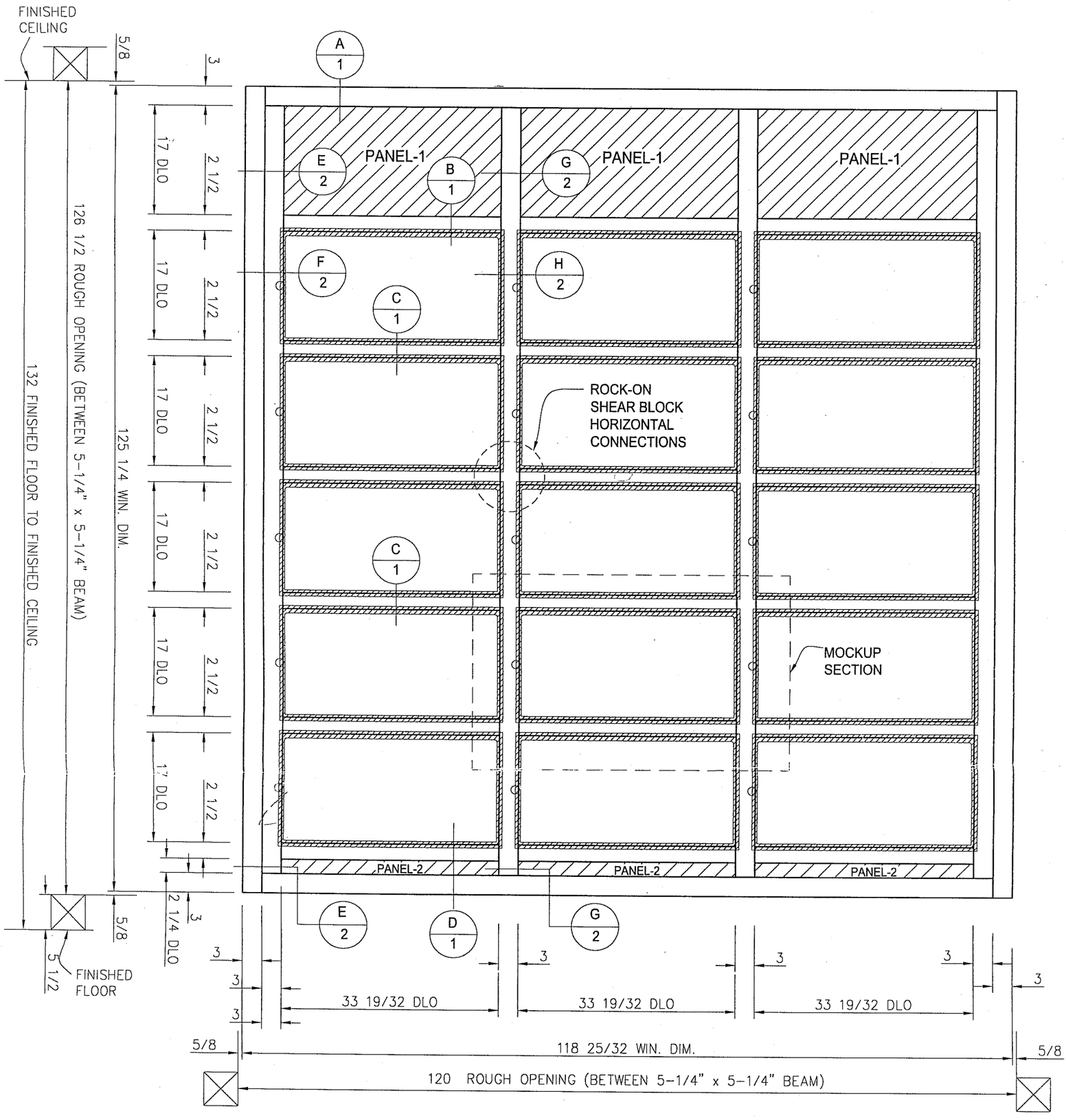

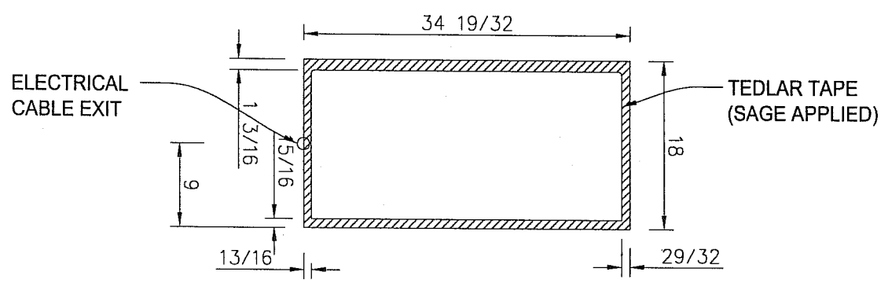

SAGE MODULE

PROPOSAL NO.	M-3646
SCALE:	3/4"=1'-0"
DATE:	2/17/03
DRAWN BY:	T. MIFFLIN
SHEET NO.	E 1

PROJECT NAME: LAWRENCE BERKELEY NATIONAL LAB
LOCATION: BERKELEY, CA

ARCHITECT:

SYSTEM: SUPERWALL

DESIGN BASED ON
DESIGN WIND LOAD:
ALLOWABLE DEFLECTION:
WATER PENETRATION:
AIR INFILTRATION:

COMPLETE PROJECT SPECIFICATIONS
☐ ARE AVAILABLE AT THIS TIME...
☒ ARE NOT AVAILABLE AT THIS TIME...

WAUSAU
WINDOW AND WALL SYSTEMS
1415 West Street
P.O. Box 1746
Wausau, WI. 54402-1746
Phone: (715) 845-2161
Fax: (715) 843-4350

PROPRIETARY NOTICE
Preliminary details are provided as an Architectural service. This drawing and the contents herein are the property of Wausau. Use of this drawing, contents, or design concepts for purposes other than estimating, drawing preparation and/or manufacturing for Wausau shall be cause for legal recourse by Wausau.

B

J:\MXXXX\m-3646\E1.DWG, 03/07/2003 04:14:07 PM, TMIFFLIN

SAGE SYSTEM ELEVATION
CABLE ROUTE
(EXTERIOR VIEW)

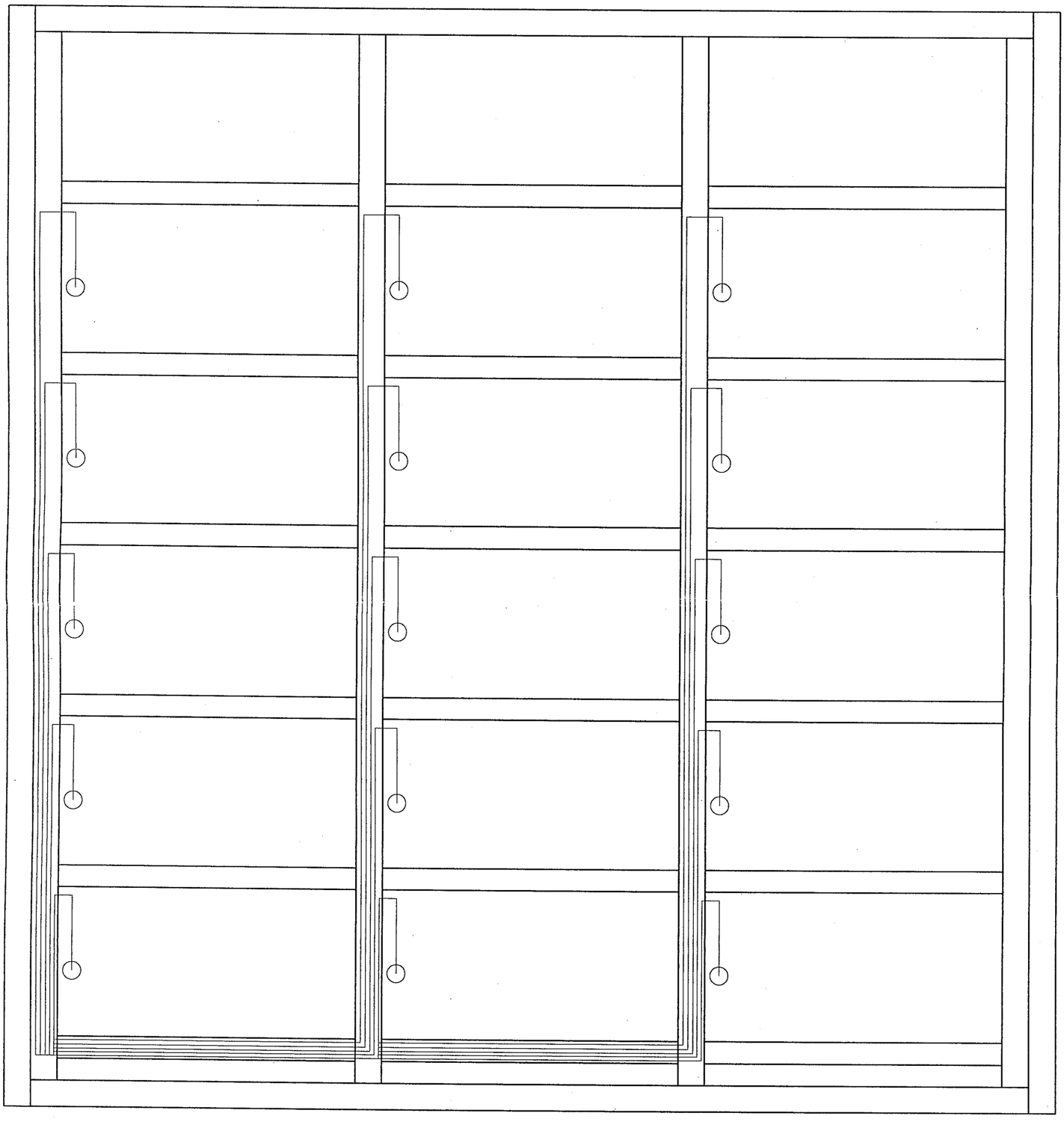

PROPOSAL NO.	M-3646
SCALE:	3/4"=1'-0"
DATE:	2/17/03
DRAWN BY:	T. MIFFLIN
SHEET NO.	E 1A

PROJECT NAME: LAWRENCE BERKELEY NATIONAL LAB
LOCATION: BERKELEY, CA

ARCHITECT:

SYSTEM: SUPERWALL

DESIGN BASED ON
DESIGN WIND LOAD:
ALLOWABLE DEFLECTION:
WATER PENETRATION:
AIR INFILTRATION:

COMPLETE PROJECT SPECIFICATIONS
☐ ARE AVAILABLE AT THIS TIME...
☒ ARE NOT AVAILABLE AT THIS TIME...

WAUSAU
WINDOW AND WALL SYSTEMS
1415 West Street
P.O. Box 1746
Wausau, WI. 54402-1746
Phone: (715) 845-2161
Fax: (715) 843-4350

PROPRIETARY NOTICE
Preliminary details are provided as an Architectural service. This drawing and the contents herein are the property of Wausau. Use of this drawing, contents, or design concepts for purposes other than estimating, drawing preparation and/or manufacturing for Wausau shall be cause for legal recourse by Wausau.

B

J:\MXXXX\m-3646\E1A.DWG, 03/07/2003 04:14:24 PM, TMIFFLIN

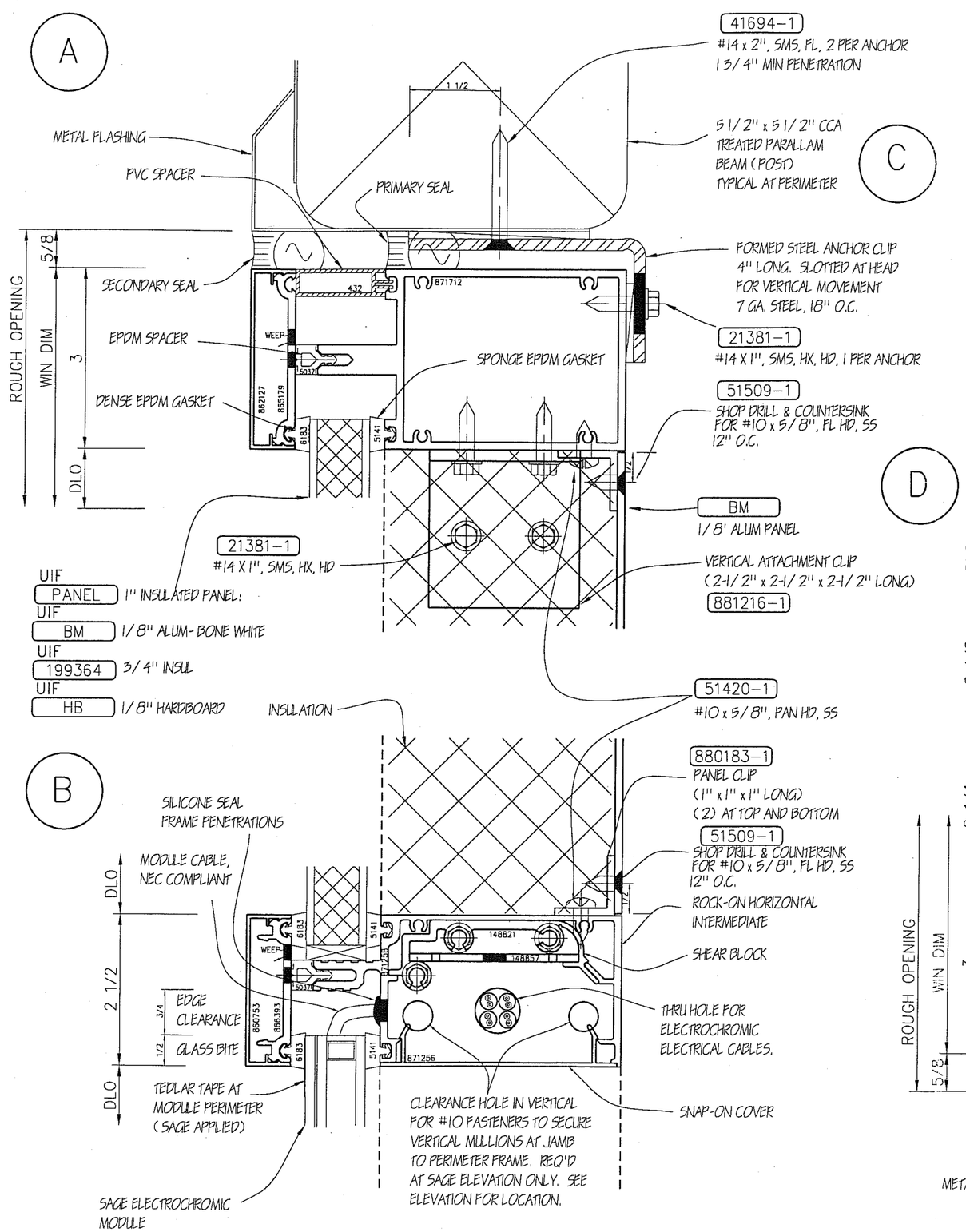

PROPRIETARY NOTICE

Preliminary details are provided as an Architectural service. This drawing and the contents herein are the property of Wausau. Use of this drawing, contents, or design concepts for purposes other than estimating, drawing preparation and/or manufacturing for Wausau shall be cause for legal recourse by Wausau.

WAUSAU
WINDOW AND WALL SYSTEMS
1415 West Street
P.O. Box 1746
Wausau, WI. 54402-1746
Phone: (715) 845-2161
Fax: (715) 843-4350

PROJECT NAME: LAWRANCE BERKELEY LAB TEST FACILITY
LOCATION: BERKELEY, CALIFORNIA

ARCHITECT:

SYSTEM: KD SUPERWALL (2 1/2" x 6 1/4")

DESIGN BASED ON
DESIGN WIND LOAD:
ALLOWABLE DEFLECTION:
WATER PENETRATION:
AIR INFILTRATION:

COMPLETE PROJECT SPECIFICATIONS
☐ ARE AVAILABLE AT THIS TIME...
☒ ARE NOT AVAILABLE AT THIS TIME...

PROPOSAL NO.
M-3646

SCALE: Half
DATE: 2/17/03

DRAWN BY:
T. MIFFLIN

SHEET NO.
D
1

J:\MXXXX\m-3646\D1.DWG, 03/07/2003 04:12:14 PM, TMIFFLIN

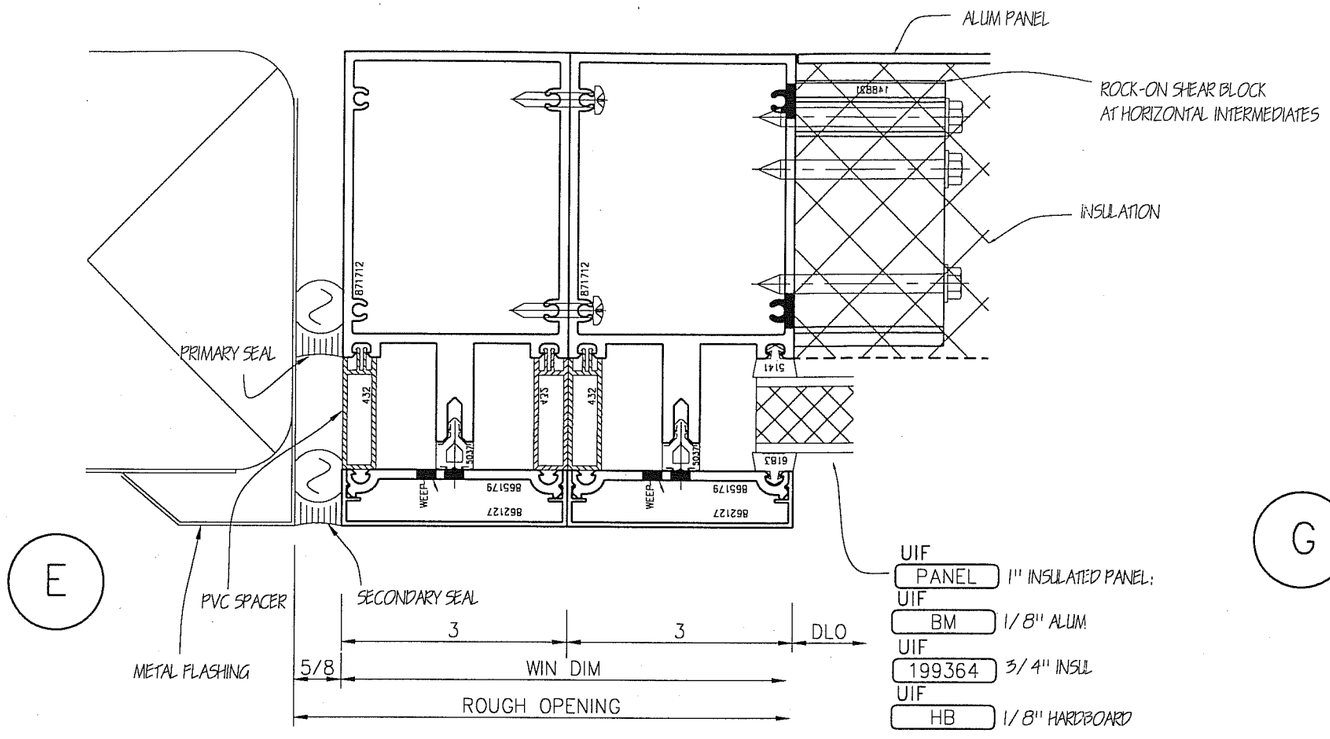

E

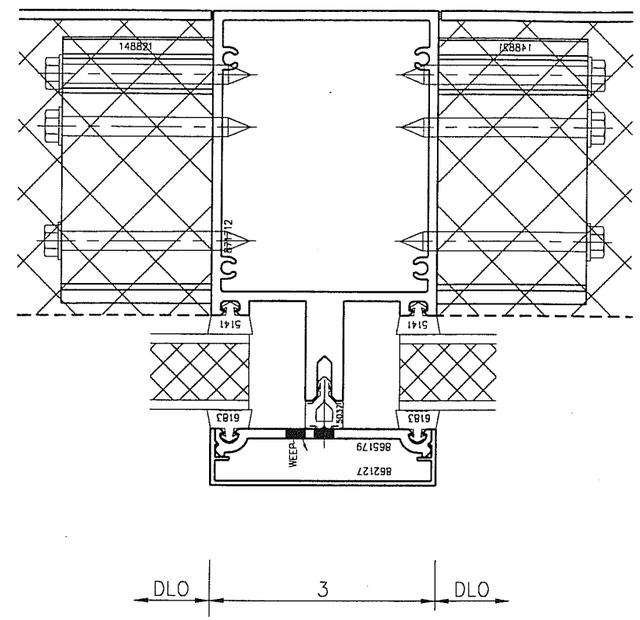

G

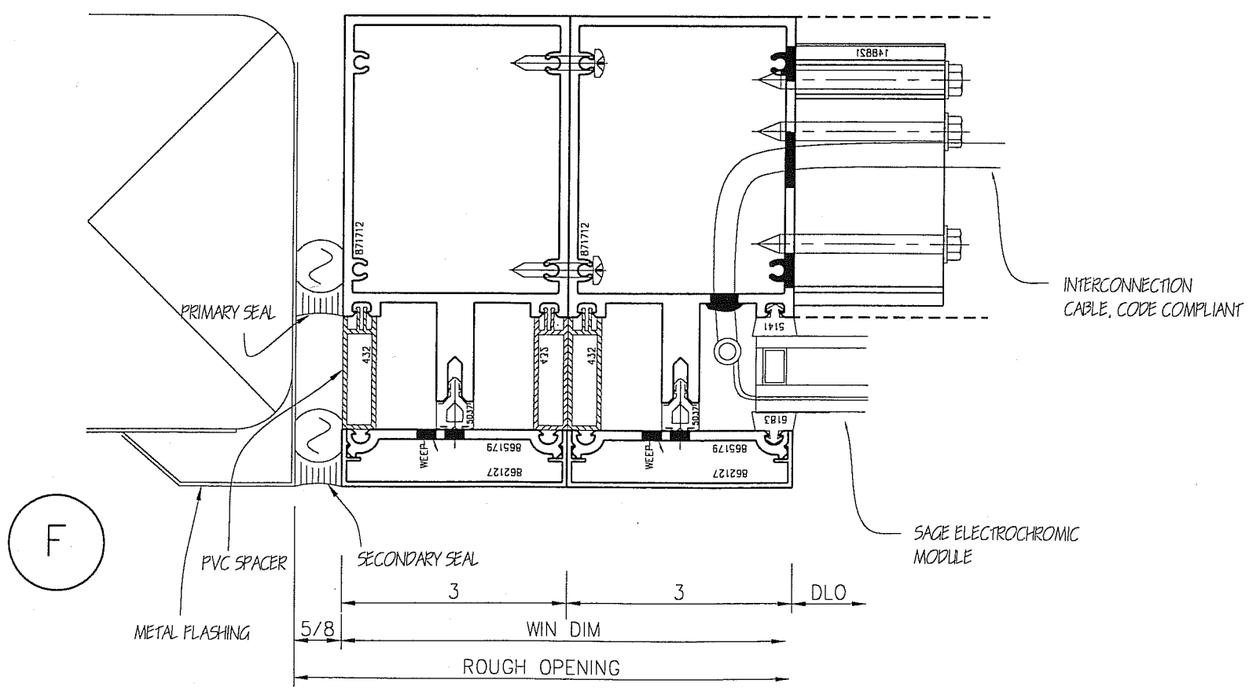

F

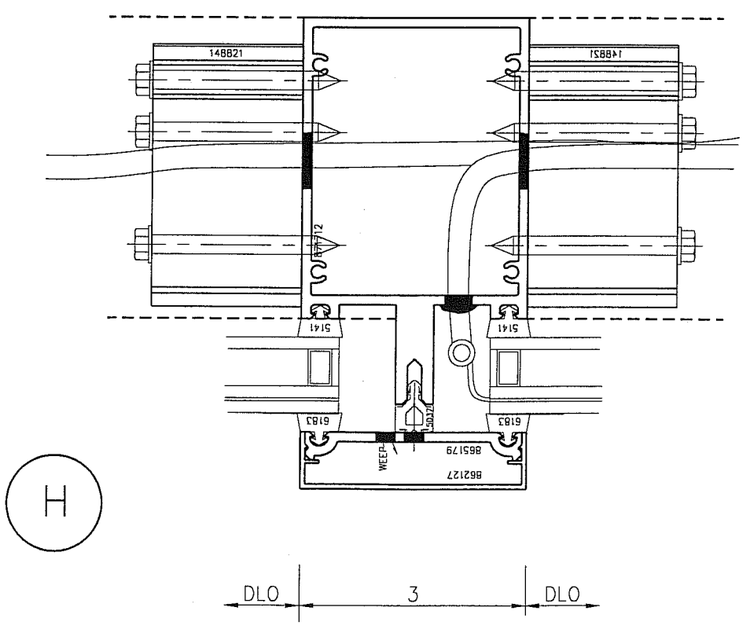

H

PROPRIETARY NOTICE

Preliminary details are provided as an Architectural service. This drawing and the contents herein are the property of Wausau. Use of this drawing, contents, or design concepts for purposes other than estimating, drawing preparation and/or manufacturing for Wausau shall be cause for legal recourse by Wausau.

WAUSAU
WINDOW AND WALL SYSTEMS
1415 West Street
P.O. Box 1746
Wausau, WI. 54402-1746
Phone: (715) 845-2161
Fax: (715) 843-4350

PROJECT NAME: LAWERANCE BERKELEY LAB TEST FACILITY
LOCATION: BERKELEY, CALIFORNIA

ARCHITECT:

SYSTEM: KD SUPERWALL (2 1/2" x 6 1/4")

DESIGN BASED ON
DESIGN WIND LOAD:
ALLOWABLE DEFLECTION:
WATER PENETRATION:
AIR INFILTRATION:

COMPLETE PROJECT SPECIFICATIONS
☐ ARE AVAILABLE AT THIS TIME...
☒ ARE NOT AVAILABLE AT THIS TIME...

PROPOSAL NO.
M-3646

SCALE: Half
DATE: 2/17/03

DRAWN BY: T. MIFFLIN

SHEET NO.
D
2

J:\MXXXXXm-3646\D2.DWG, 03/07/2003 04:12:50 PM, TMIFFLIN

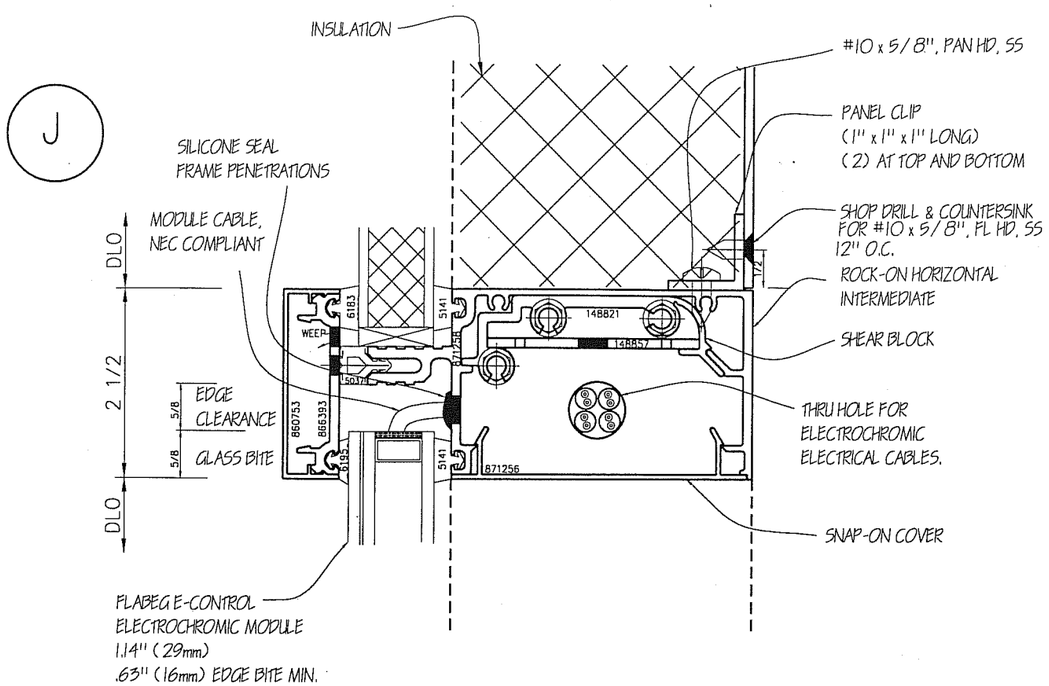

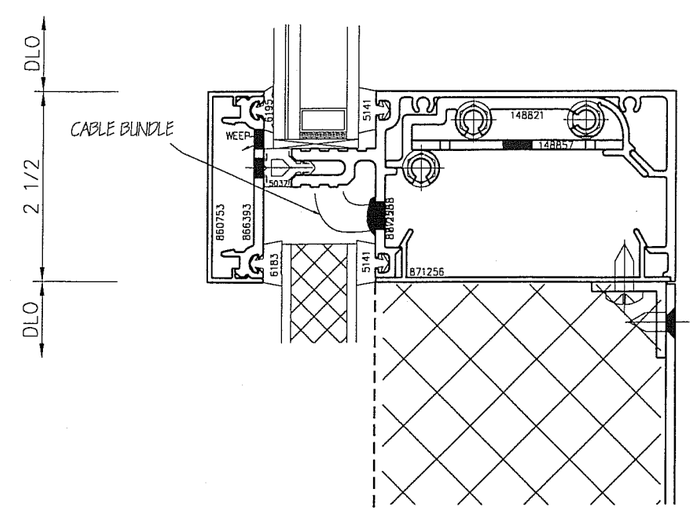

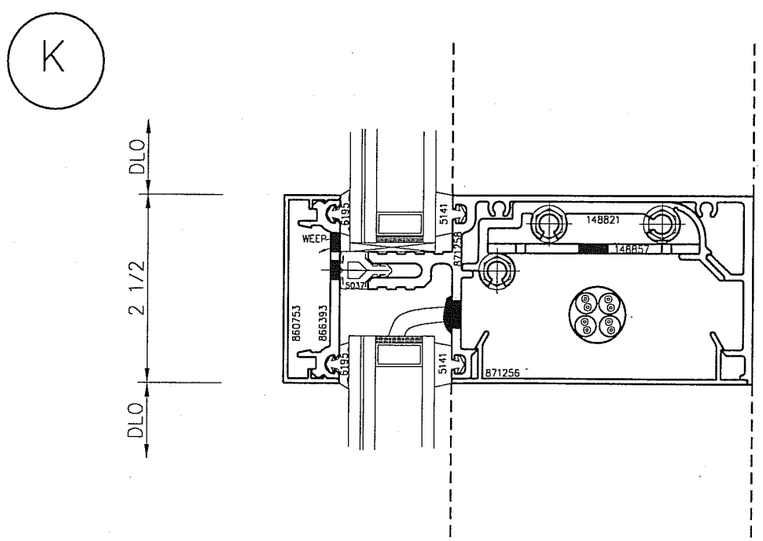

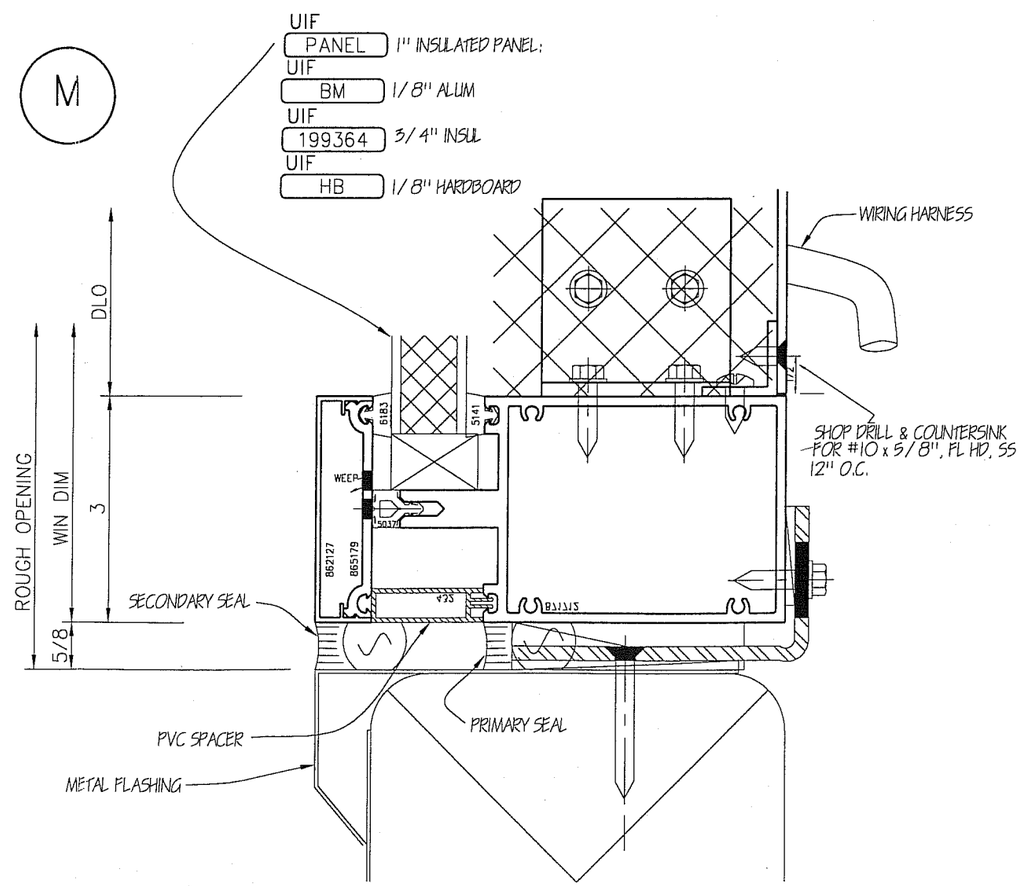

PROPRIETARY NOTICE

Preliminary details are provided as an Architectural service. This drawing and the contents herein are the property of Wausau. Use of this drawing, contents, or design concepts for purposes other than estimating, drawing preparation and/or manufacturing for Wausau shall be cause for legal recourse by Wausau.

WAUSAU
WINDOW AND WALL SYSTEMS
1415 West Street
P.O. Box 1746
Wausau, WI. 54402-1746
Phone: (715) 845-2161
Fax: (715) 843-4350

PROJECT NAME: LAWERANCE BERKELEY LAB TEST FACILITY
LOCATION: BERKELEY, CALIFORNIA

ARCHITECT:

SYSTEM: KD SUPERWALL (2 1/2" x 6 1/4")

COMPLETE PROJECT SPECIFICATIONS
☐ ARE AVAILABLE AT THIS TIME...
☒ ARE NOT AVAILABLE AT THIS TIME...

DESIGN BASED ON
DESIGN WIND LOAD:
ALLOWABLE DEFLECTION:
WATER PENETRATION:
AIR INFILTRATION:

PROPOSAL NO.
M-3646

SCALE: Half
DATE: 2/17/03

DRAWN BY: T. MIFFLIN

SHEET NO.
D
3

J:\MXXXX\m-3646\D3.DWG, 03/07/2003 04:13:16 PM, TMIFFLIN

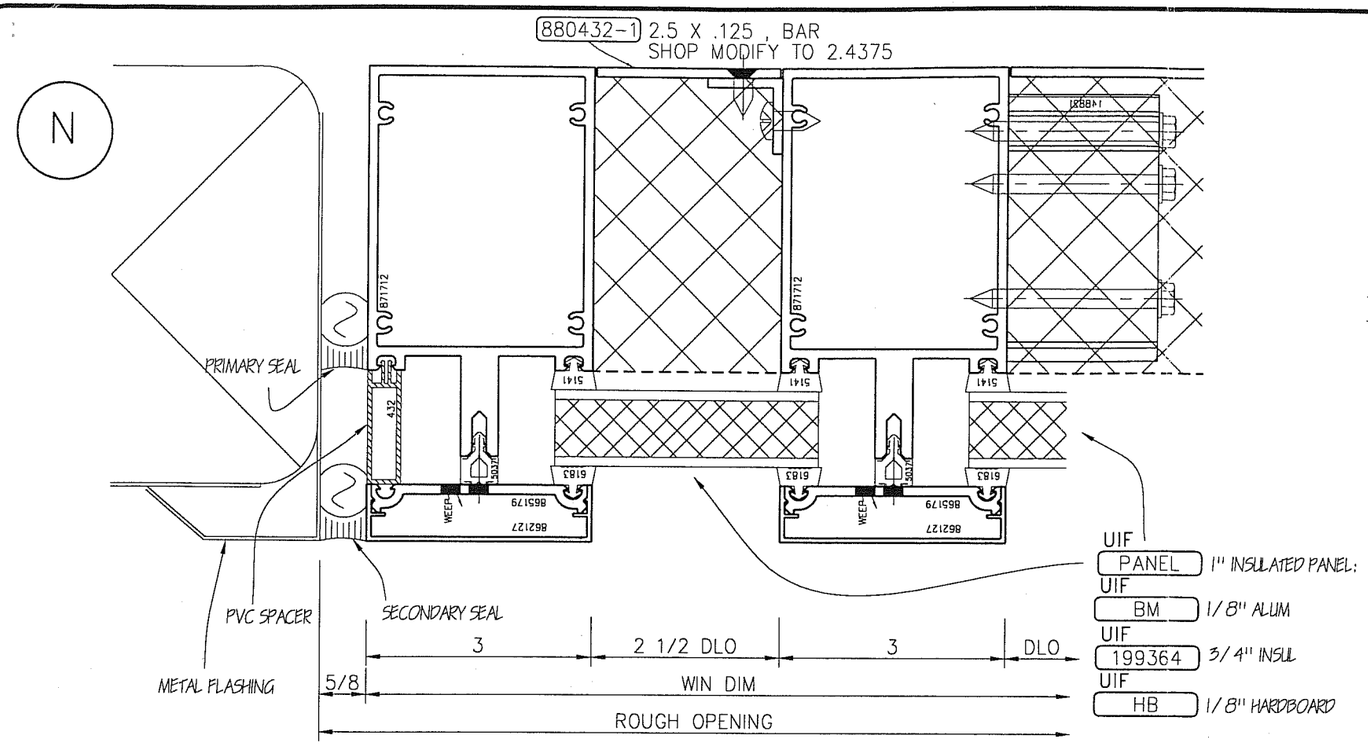

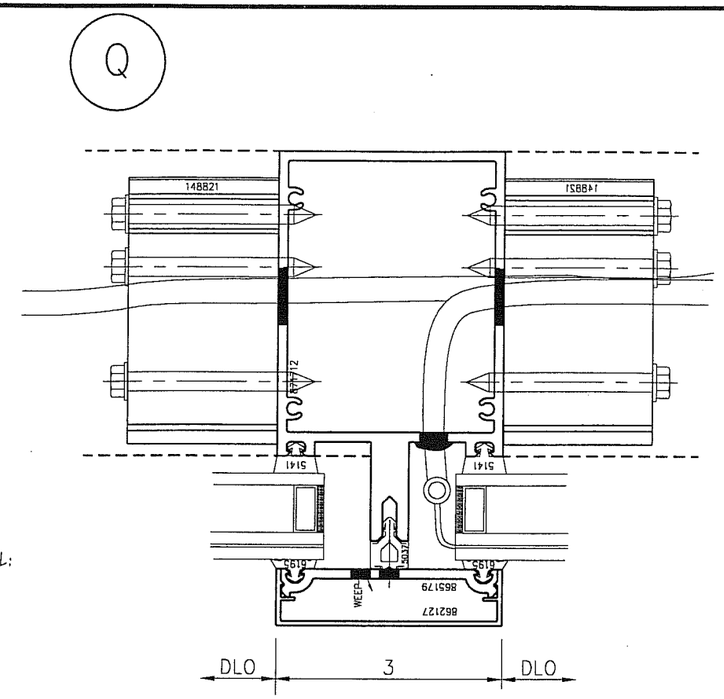

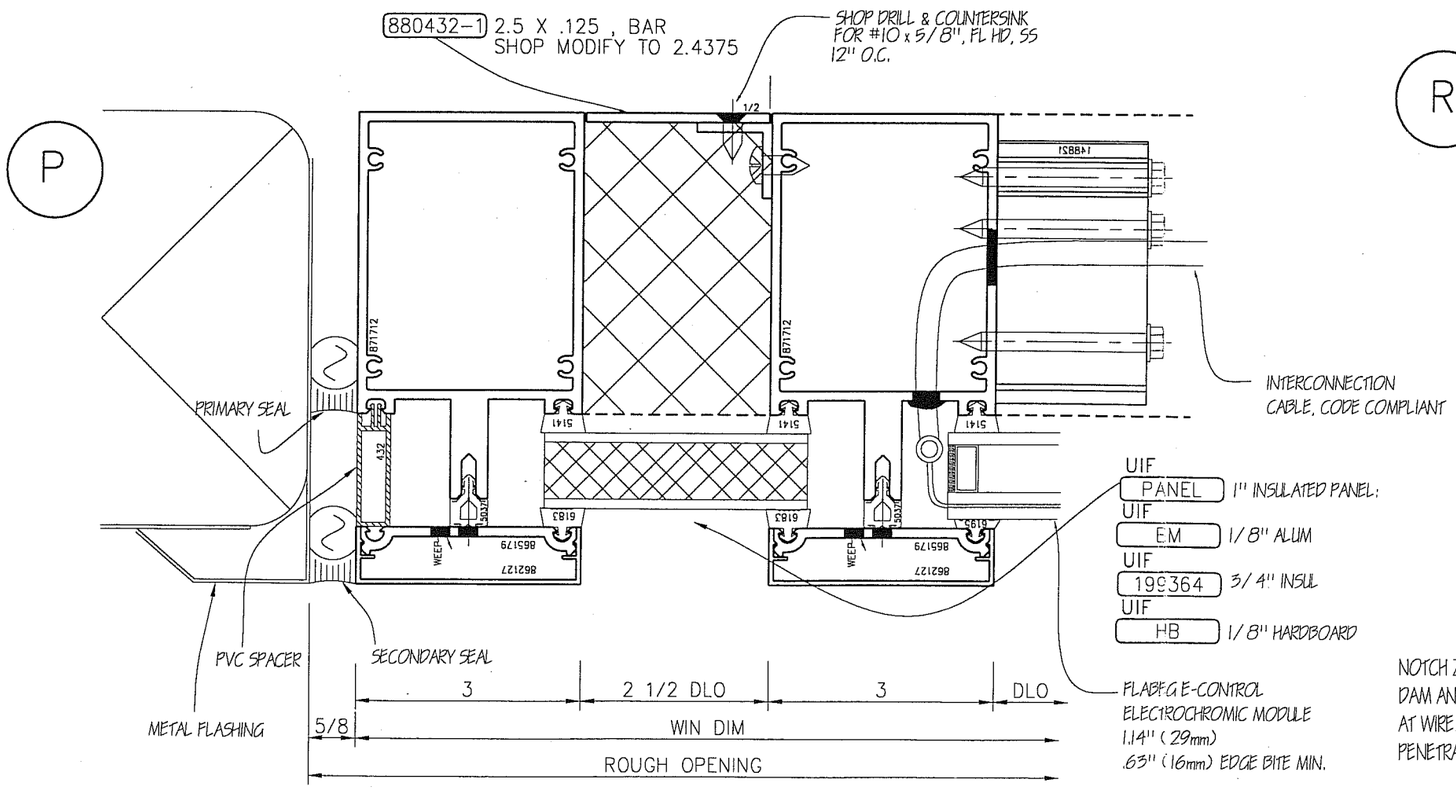

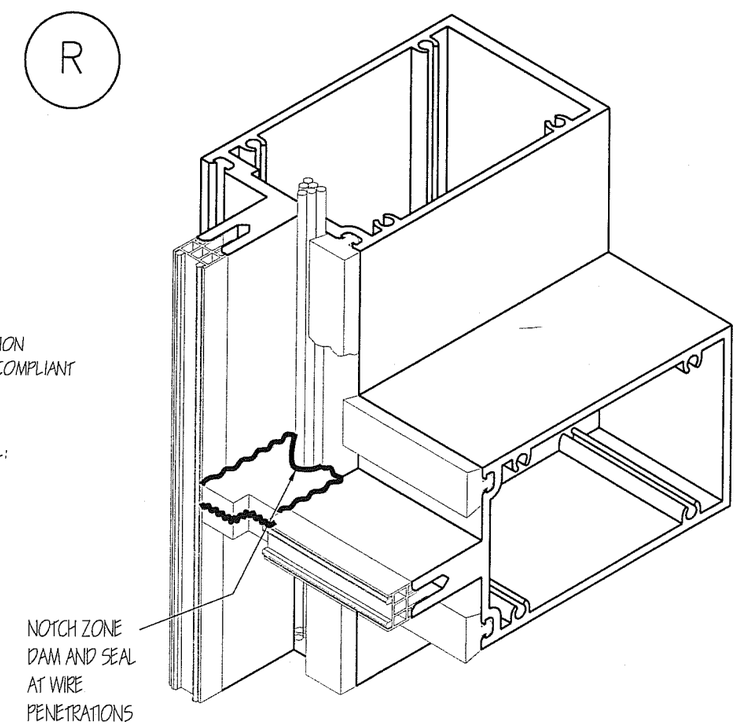

PROPRIETARY NOTICE
Preliminary details are provided as an Architectural service. This drawing and the contents herein are the property of Wausau. Use of this drawing, contents, or design concepts for purposes other than estimating, drawing preparation and/or manufacturing for Wausau shall be cause for legal recourse by Wausau.

WAUSAU
WINDOW AND WALL SYSTEMS
1415 West Street
P.O. Box 1746
Wausau, WI. 54402-1746
Phone: (715) 845-2161
Fax: (715) 843-4350

PROJECT NAME: LAWERANCE BERKELEY LAB TEST FACILITY
LOCATION: BERKELEY, CALIFORNIA
ARCHITECT:
SYSTEM: KD SUPERWALL (2 1/2" x 6 1/4")

COMPLETE PROJECT SPECIFICATIONS
☐ ARE AVAILABLE AT THIS TIME...
☒ ARE NOT AVAILABLE AT THIS TIME...

DESIGN BASED ON
DESIGN WIND LOAD:
ALLOWABLE DEFLECTION:
WATER PENETRATION:
AIR INFILTRATION:

PROPOSAL NO. M-3646
SCALE: Half
DATE: 2/17/03
DRAWN BY: T. MIFFLIN
SHEET NO. D 4

J:\MXXXXX\m-3646\D4.DWG, 03/07/2003 04:13:47 PM, TMIFFLIN