8. SPECIAL CASES

8.1. Overview

The following special cases are covered in this section:

8.2.	Meeting Rails	page 8-2
8.3.	Dividers	page 8-10
8.4.	Storm Windows	page 8-39
8.5.	Flat Skylights	page 8-48
8.6.	Tubular Daylighting Devices	page 8-61
8.7.	Doors	page 8-81
8.8.	Spacers	page 8-82
8.9.	Non Continuous Thermal Bridge Elements	page 8-84
8.10.	Site Built Fenestration Products Curtain Walls, Window Walls and Sloped Glazing	page 8-98

8.2 Meeting Rails

Meeting rail cross sections are the stiles or rails that meet in the middle of a sliding window. In this manual, the term "meeting rail' is used generically to describe meeting rails, meeting stiles, interlock stiles, interlocking stiles, sliding stiles, check rails, and check stiles.

8.2.1. Modeling Meeting Rails

When modeling a meeting rail, both the sashes and their associated glazing systems are modeled. Figure 8-1 shows an example of the meeting rail from a horizontal aluminum slider.

Creating the cross section for a meeting rail is no different than any other model in THERM. A few things to keep in mind are:

- Two glazing systems are imported, one facing up and one facing down
- Interior boundary conditions for each of the glazing systems are labeled with the **Edge** U-factor tag, and the program averages the values for both to derive one Edge U-factor.
- Model the meeting rail with the glazing systems facing up and down (see Section 6.3.2, "Cross Section Orientation" in this manual). If the DXF file is drawn with them in a horizontal position, draw the frame cross section, and then rotate it before inserting the glazing system.

The following discussion lists the steps for making a cross section with two glazing systems and assigning the correct boundary conditions.

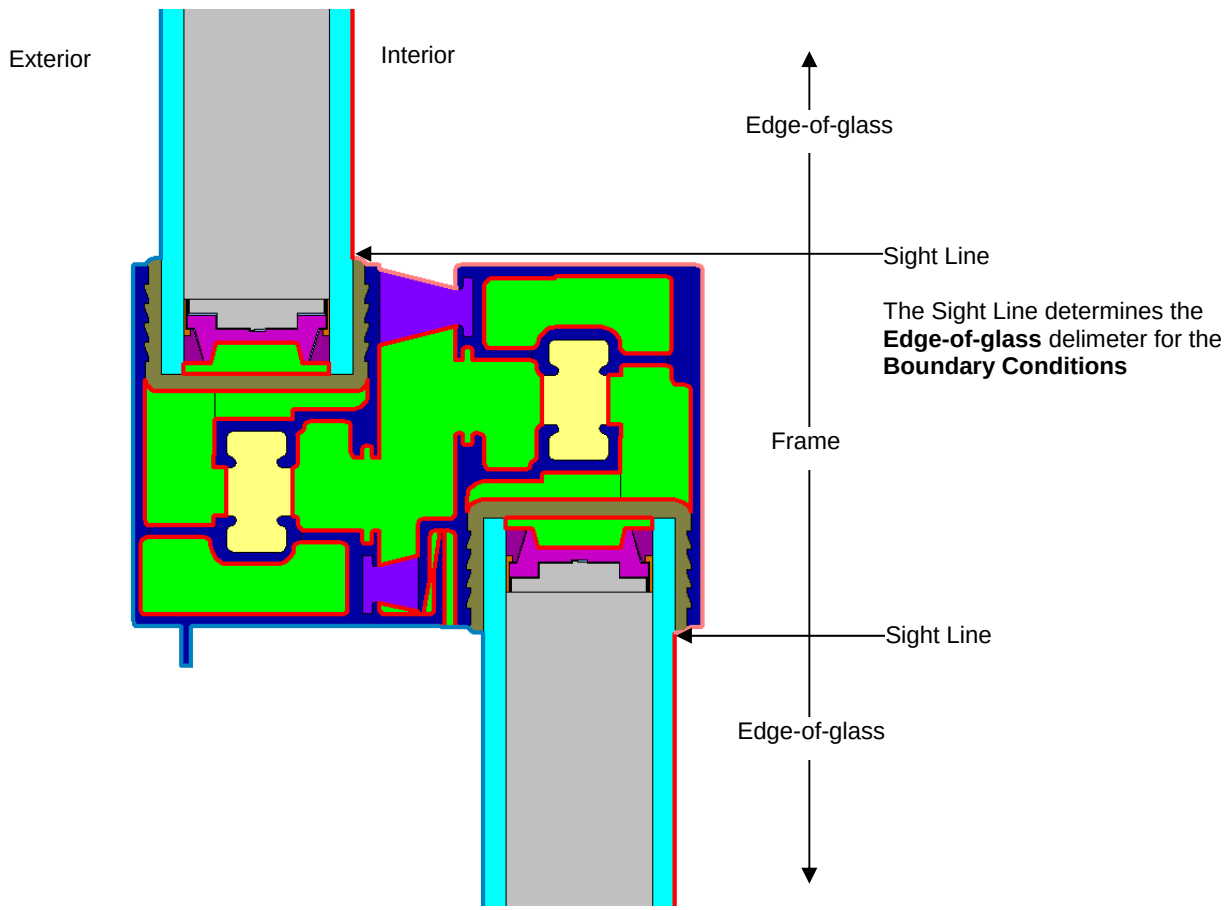

Figure 8-1. Meeting rail cross section.

8.2.2. Steps for Meeting Rail U-factor Calculation

1. Using dimensioned drawings or a DXF file, create the cross section for the frame portion of the meeting rail. In Figure 8-2, the frame for the horizontal aluminum slider meeting rail has been created.

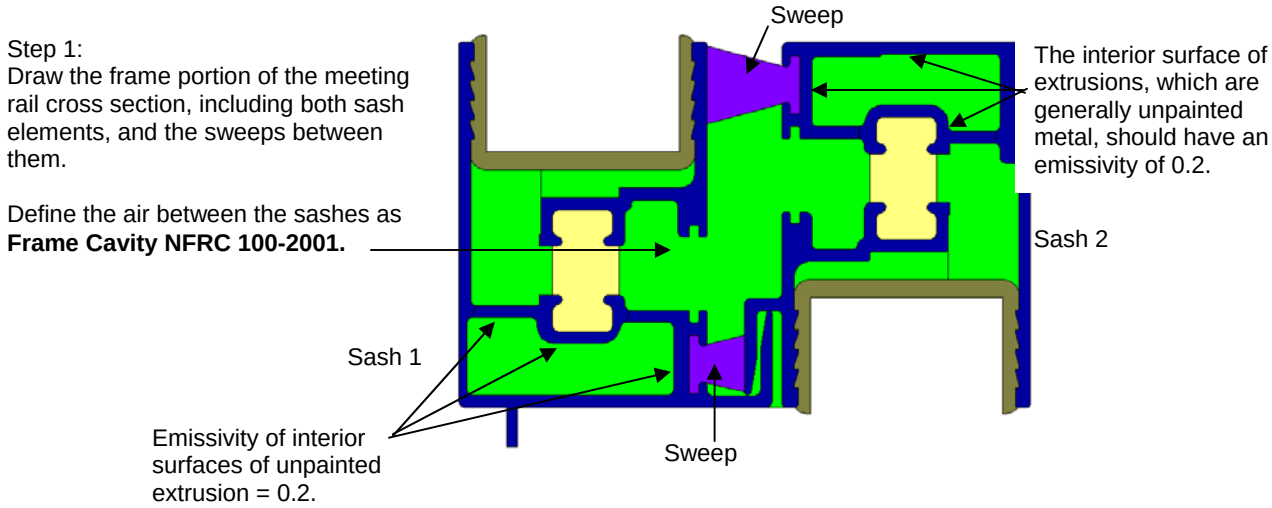

Figure 8-2. Frame portion of meeting rail cross section.

2. Position the **Locator** (using the **Draw/Locator** menu choice, or pressing **Shift F2**) in the lower left corner of the frame where the first glazing system will be inserted, as shown in Figure 8-3.

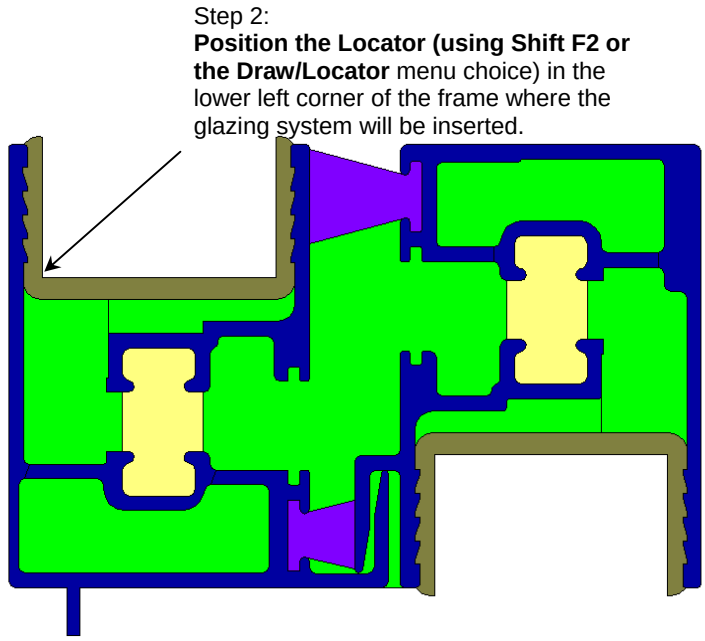

Figure 8-3. Position the Locator for the first glazing system.

3. Using the **Libraries/Glazing Systems** menu option (or the **F6** key), insert the upper glazing system, as shown in Figure 8-4. In this example, the spacer will be copied and pasted into the cross section later. Add a spacer and use the Material Link (Library/Create Link) to link the glazing system cavity conductivity with adjacent cavities in a spacer which is open to the glazing system cavity, if necessary.

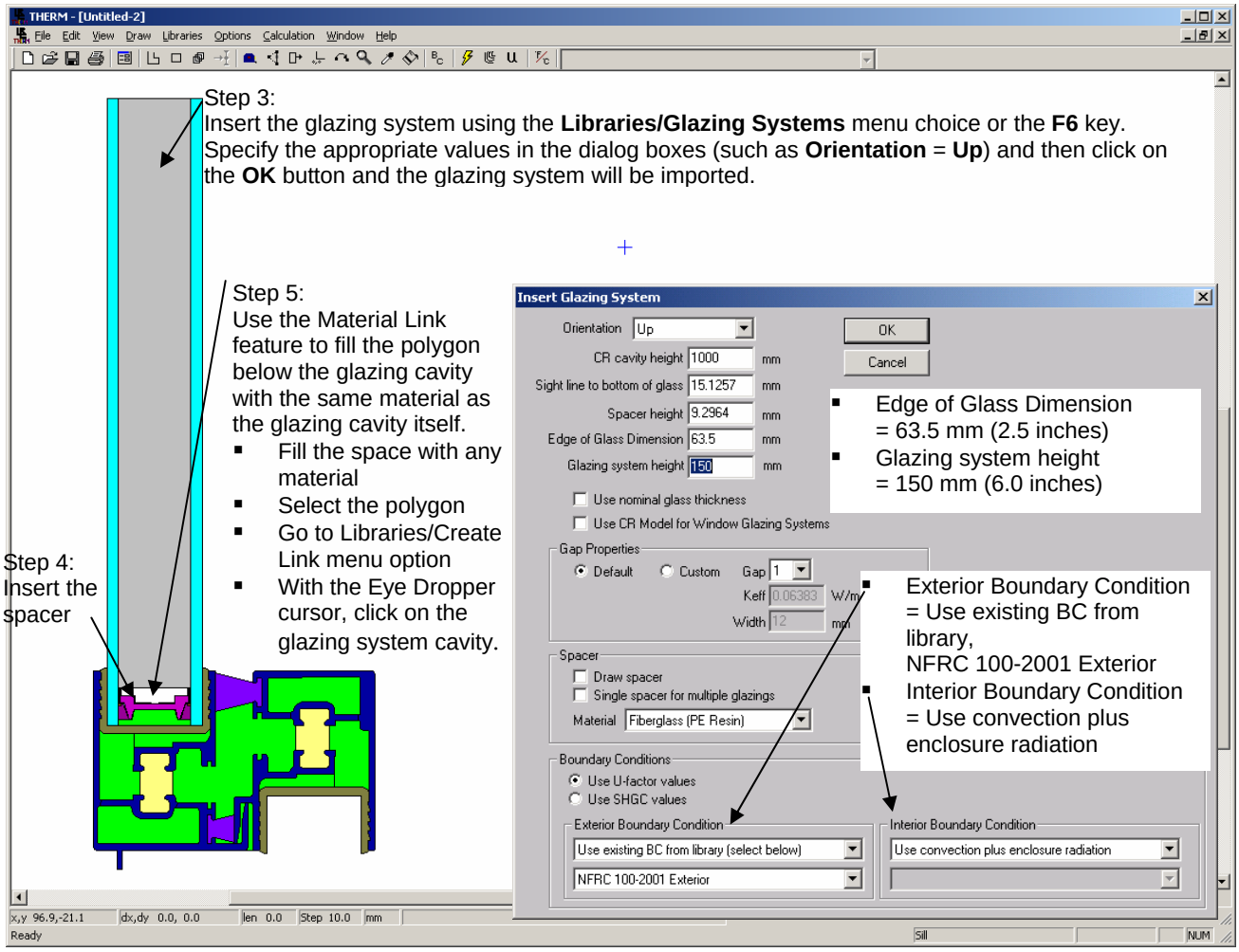

Figure 8-4. Insert the first glazing system.

4. Reposition the locator to the upper left corner for the 2nd glazing system.

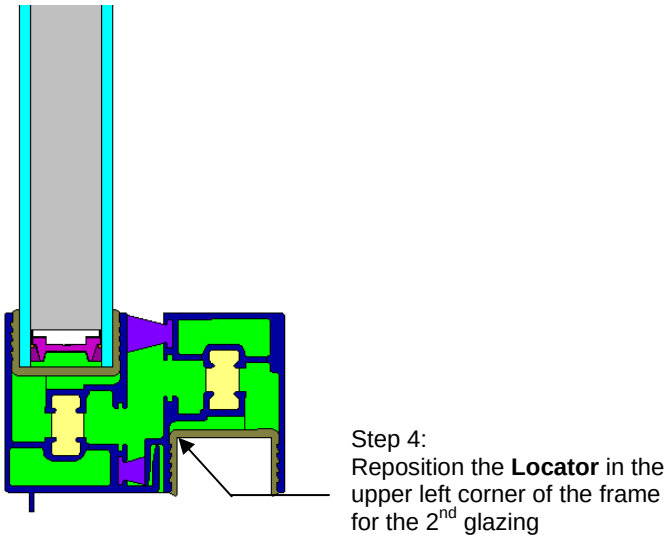

Figure 8-5. Reposition the Locator for the 2nd glazing system.

5. Insert the 2nd glazing system, setting the **Orientation** to "Down", and entering the correct values for **Sight line to bottom of glass** and **Spacer height**.

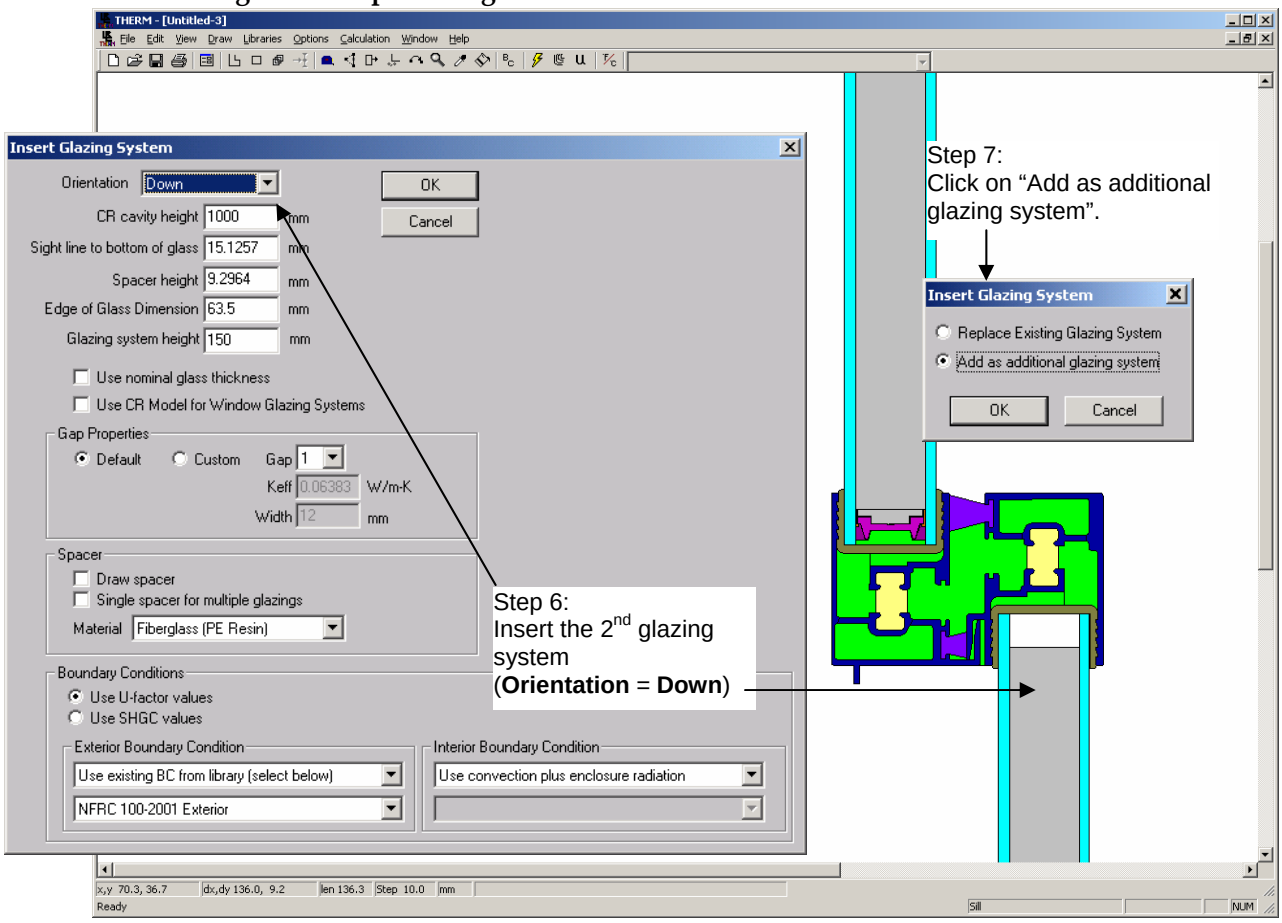

Figure 8-6. Insert the 2nd glazing system.

6. Add spacers and create materials linked to the glazing system cavity if necessary.

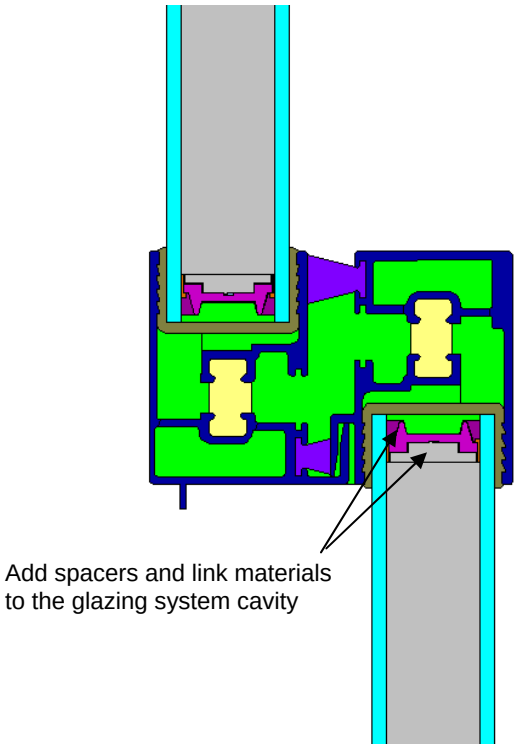

Figure 8-7. Add custom spacers.

7. Define the boundary conditions by pressing the **Boundary Conditions** toolbar button, or clicking on the **Draw/Boundary Conditions** menu choice, or pressing the **F10** key. Make sure that the interior boundary conditions are set to **Radiation Model** = "AutoEnclosure". Assign the **Edge U-factor tag** to each of the interior glazing system boundary conditions, as shown in Figure 8-8.

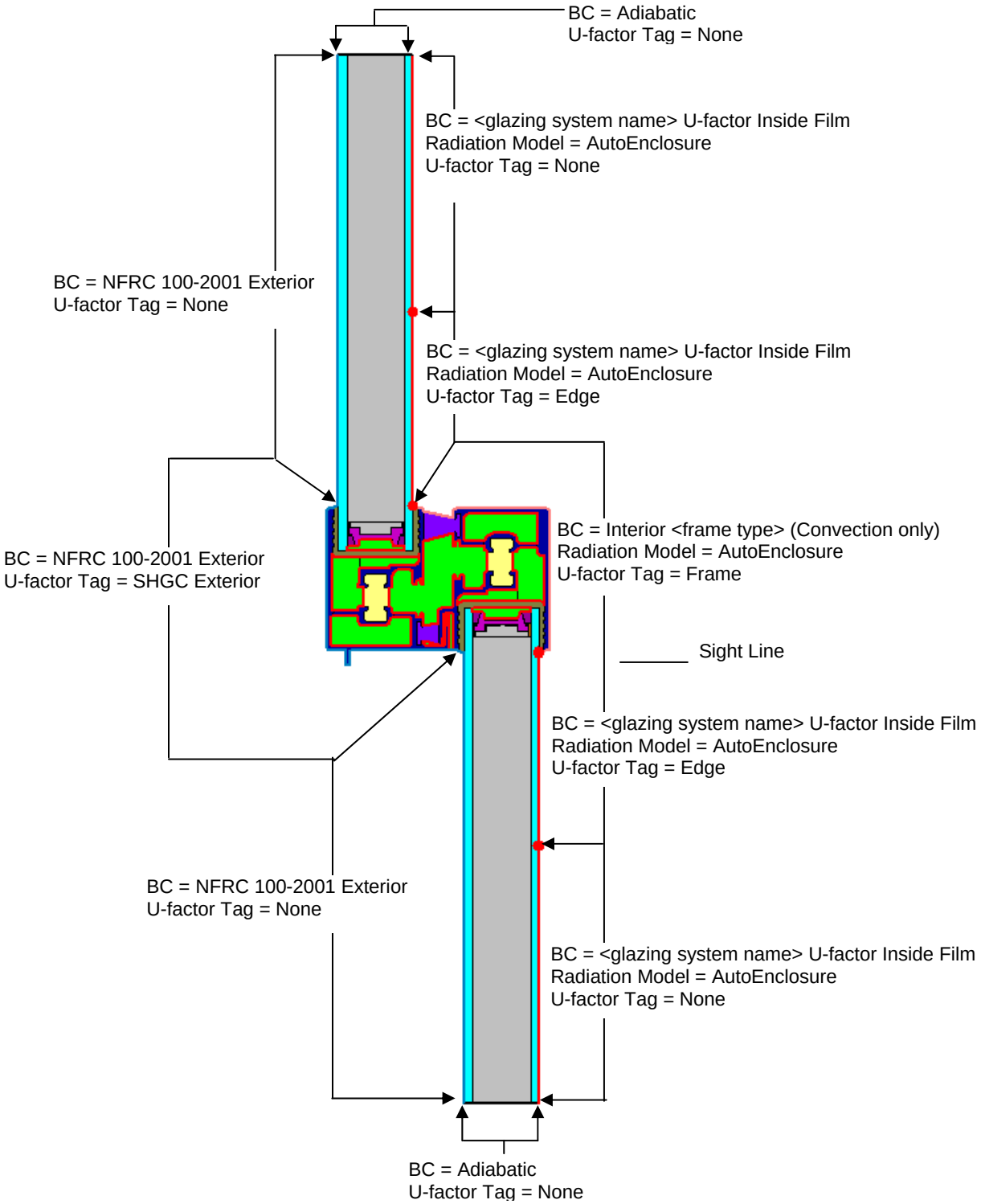

Figure 8-8. Define the Boundary Conditions for the meeting rail.

8. Run the simulation, by pressing the **Calc** toolbar button, clicking on the **Calculation/Calculation** menu choice, or pressing the **F9** key. The U-factor results are calculated for the **Frame** and **Edge U-factor tags**, as shown in the figure below.

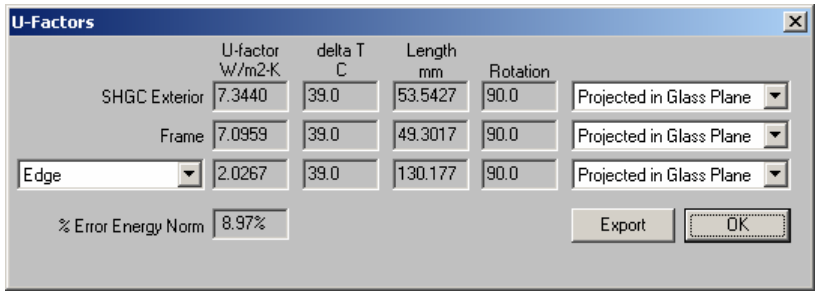

Figure 8-9. Calculate the results.

9. Import the THERM file into the WINDOW Frame Library.

8.2.3. Steps for Meeting Rail Condensation Resistance Calculation

The Condensation Resistance model is only appropriate for *horizontal meeting rails* (found in vertical sliding products) – THERM will not calculate the Condensation Resistance for a file with the **Cross Section Type** set to "Vertical Meeting Rail".

There are two methods for calculating the Condensation Resistance information in THERM, which will be used in WINDOW to calculate the total Condensation Resistance of the product:

- Check the "Use CR Model for Window Glazing System" checkbox when importing a glazing system

  OR

- In the Options menu, Preferences choice, THERM File Options tab, check the "Use CR Model for Glazing Systems", as shown in the figure below.

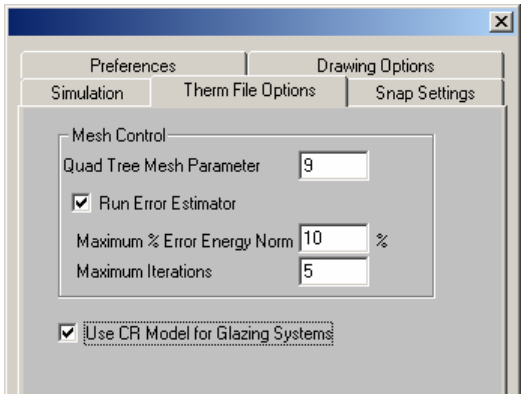

Figure 8-10 In Options/Preferences/Therm File Options, check the "Use CR Model for Glazing Systems" checkbox.

When the CR model has been "turned on", red boundary conditions will appear inside the glazing system, and the following steps should be taken to simulate the file:

1. Check the emissivities of these boundary conditions. They should be the following:
   - Emissivity of the surrounding surface, such as 0.84 for standard glass, 0.90 for most frame materials, 0.20 for metal, and so forth.
   - 1.0 for the adiabatic (open end) of the glazing cavity.
   - Actual cavity height per Table 6-2, Section 6.4.5

2. Simulate the model. The program will calculate both U-factor results and the Condensation Resistance results.
3. Import the results into the WINDOW **Frame Library** and use the meeting rail file to create the whole product in the **Window Library** as applicable.

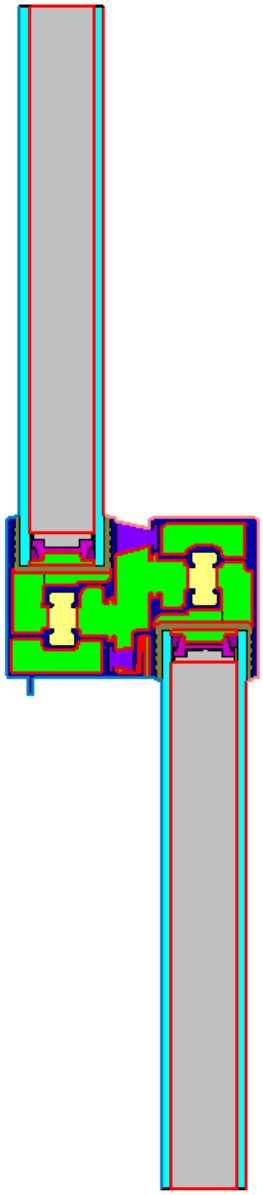

Figure 8-11 Red boundary conditions will appear inside the glazing system when the Condensation Resistance feature is activated. Check the emissivities of each of these boundaries. Note that Condensation Resistance is only modeled for horizontal meeting rails (such as in a double hung window).

8.3 Dividers

8.3.1. Internal Dividers (Suspended Grilles)

The criteria for when dividers are modeled can be found in *NFRC 100*, Section 1.4.4, "Simplifications to a Product Line". The discussion below describes the methodologies in WINDOW and THERM for modeling dividers when that criteria is met.

8.3.1.1. Modeling Steps

The modeling steps in THERM5 and WINDOW5 are the same for all divider shapes and all possible gas fills, in contrast to modeling steps in previous versions of THERM. These steps are the following:

In WINDOW:

- No new work is required, because the same glazing system that is used to model the rest of the product is used in the divider model.

In THERM:

- The new ISO 15099 modeling assumptions would theoretically warrant modeling horizontal and vertical dividers separately. However, a conservative simplification is to model all dividers, including horizontal ones, as vertical dividers. Therefore, only one divider model is created in THERM and referenced in WINDOW.
- Set the **Cross Section Type** to "Vertical Divider" for all dividers.
- Insert the glazing system twice, once facing up, with a spacer height defined as the same height as the divider height, and once facing down with the spacer height set to zero.
- *NOTE: Because all dividers are modeled as "Vertical Dividers" the CR model is not run in THERM for these files.* However, WINDOW will still calculate a whole product CR value when these dividers are used in a product, by using the U-factor temperatures for the dividers.
- Draw the true geometry of the divider in the upper glazing system, in the "spacer" area.
- Depending on the fill of the glazing system, assign the appropriate frame cavity material to the cavities between the glazing system and the divider, as well the cavity inside the divider, as follows:
  - For air-filled dividers: Assign "Frame Cavity NFRC 100-2001" material
  - For gas-filled dividers: Create a new material in the **Material Library** that is identical to the "Frame Cavity NFRC 100-2001" material, except that the gas used in the glazing system, found in the **Gas Library,** is referenced in the **Gas Fill** field. Assign this new material to the cavities in the divider. (See the example below)
- Assign Boundary Conditions.
- Simulate the results.
- Import the file into the WINDOW Divider Library. Reference the Divider as appropriate from the Window Library when constructing the whole product.

When modeling glazing options with caming, which are treated in a similar fashion to dividers, the NFRC default caming can be used. The flat caming (H-Bar) shall be used as the default shape. Laquered Yellow Brass with a conductivity of 119 W/m-K and an emissivity of 0.9 (from the ASHRAE Handbook of Fundamentals) shall be used as the default material. The caming drawing DXF file is available from the NFRC website. (Reference NFRC Technical Interpretation TI-2004-05).

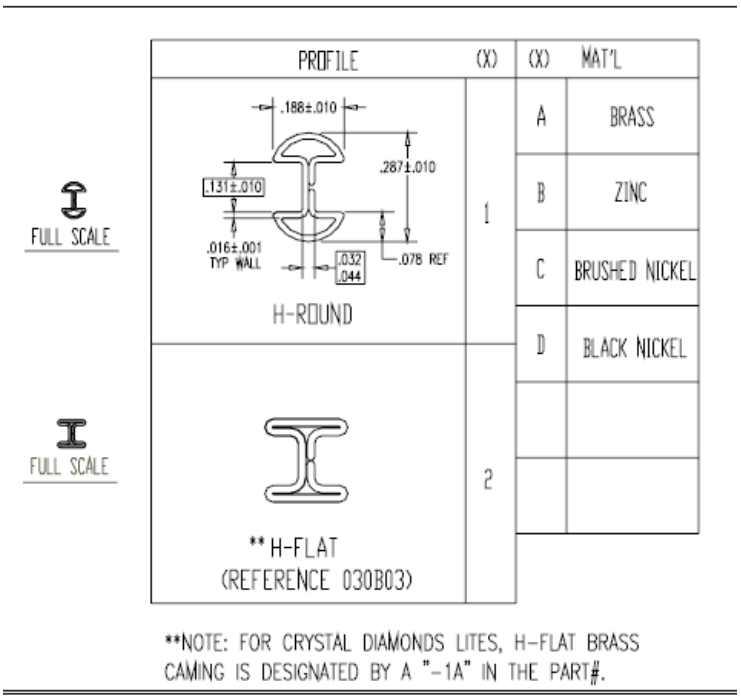

Figure 8-12 Standardized Caming Drawing

.1.. Air Filled Glazing Systems

The modeling steps for a divider with an air-filled glazing system are explained in detail in the following pages.

In THERM:

1. Set the **Cross Section Type** to "Vertical Divider".
2. Import the glazing system for the divider, which is the same glazing system as the rest of the product, with the following settings:
   - **Orientation** = Up
   - **Actual Cavity height** = 1000 mm (39 inches)
   - **Sight line to bottom of glass** = height of the divider (in this example it is 19.05 mm [0.75 inches])
   - **Spacer height** = height of the divider (in this example it is 19.05 mm [0.75 inches)
   - **Edge of Glass Dimension** = 63.5 mm (2.5 inches)
   - **Glazing System Height:** 150 mm (6.0 inches)
   - **Draw spacer** = Not checked

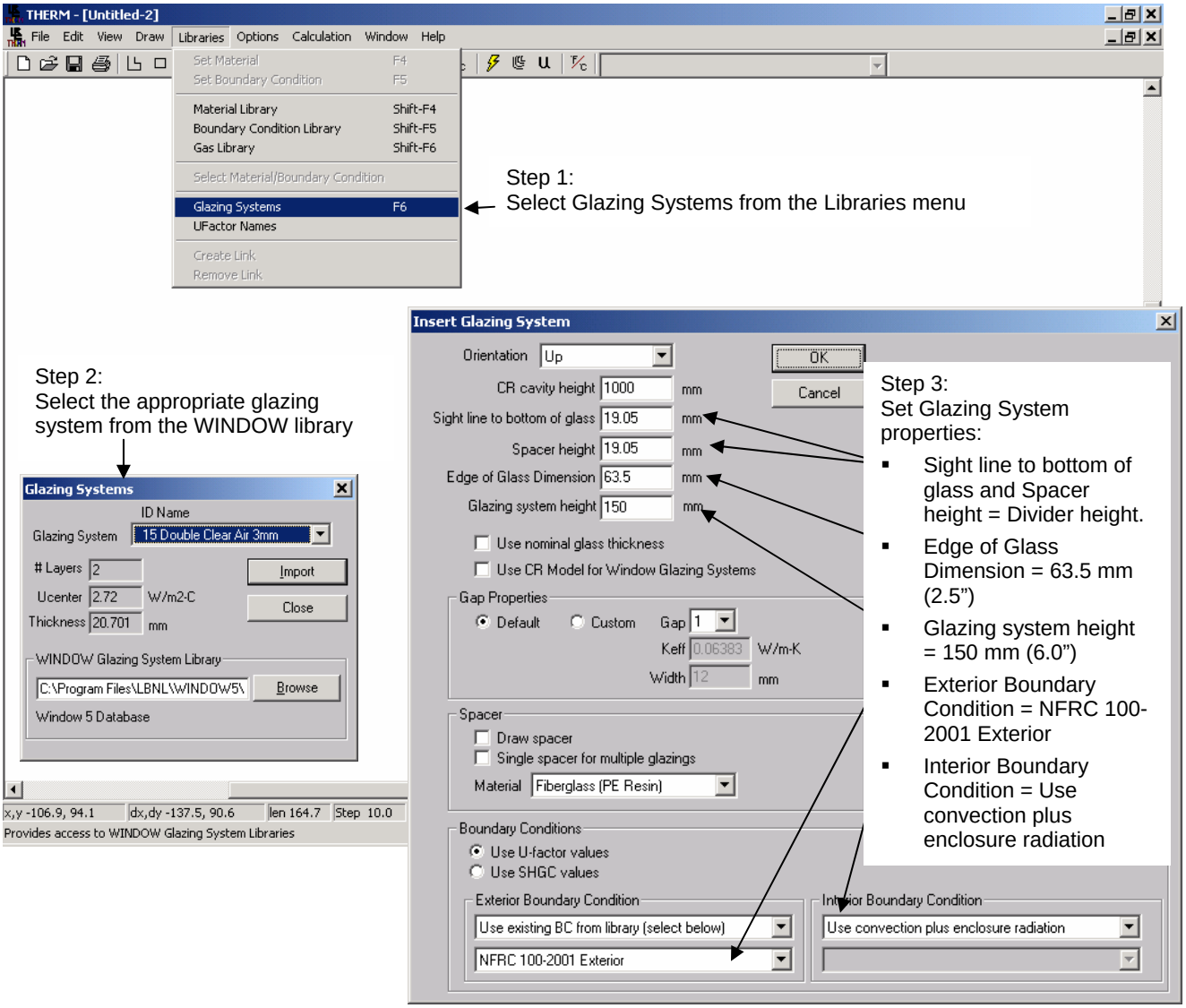

Figure 8-13. Import the first glazing system.

3. Import the glazing system again as an additional glazing system, below the first one (the locator does not have to be moved), but facing down this time. Use the following settings for this glazing system:
   - **Orientation** = Down
   - **Actual Cavity height** = 1000 mm (39 inches)
   - **Sight line to bottom of glass** = 0
   - **Spacer height** = 0
   - **Edge of Glass Dimension** = 63.5 mm (2.5 inches)
   - **Glazing System Height:** 150 mm (6.0 inches)
   - **Draw spacer** = Not checked

   Insert the glazing system as an **Additional Glazing**.

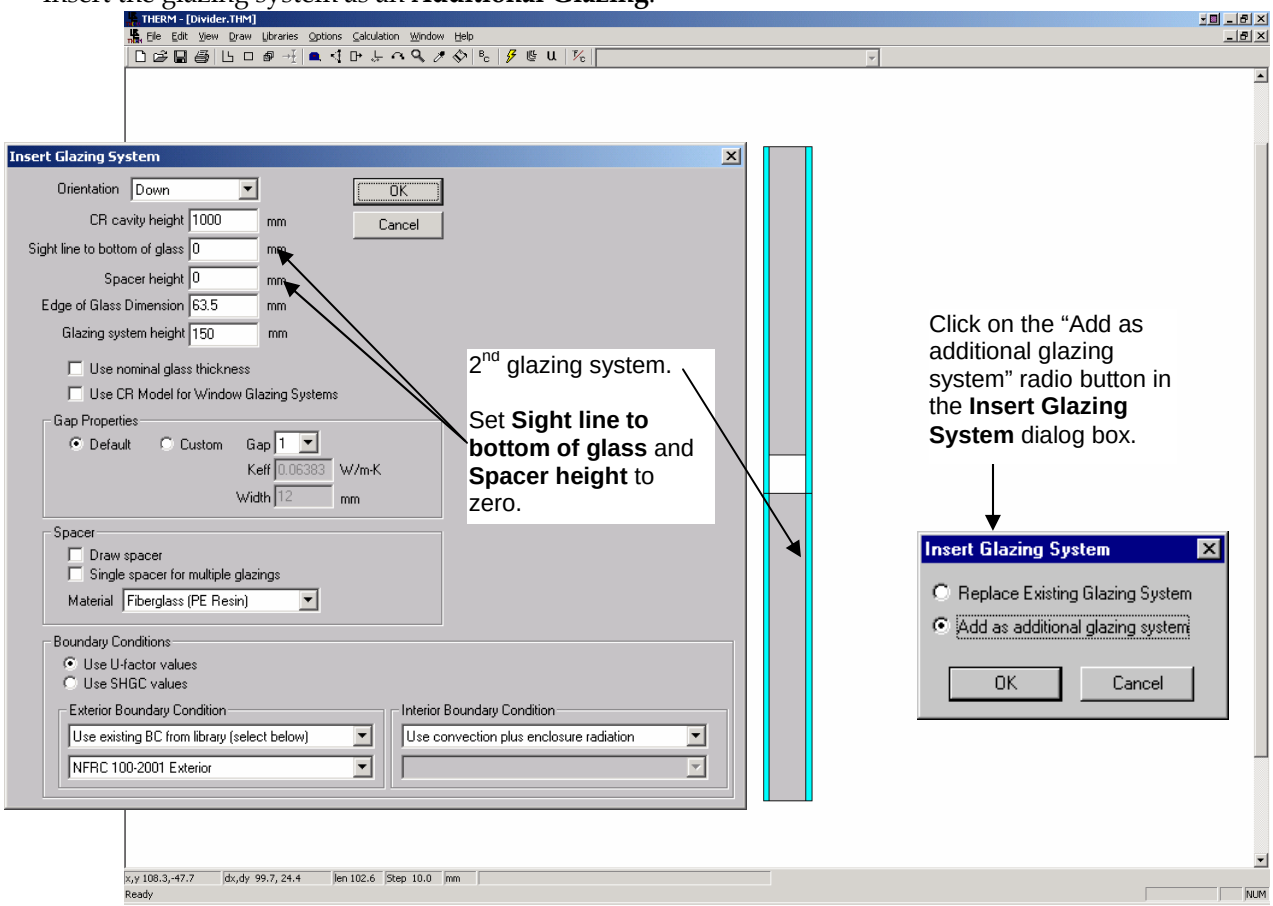

Figure 8-14. Import the second glazing system as an additional glazing system, facing down.

4. Draw (or copy and paste from another THERM file) the polygons in the cavity that represent the divider.

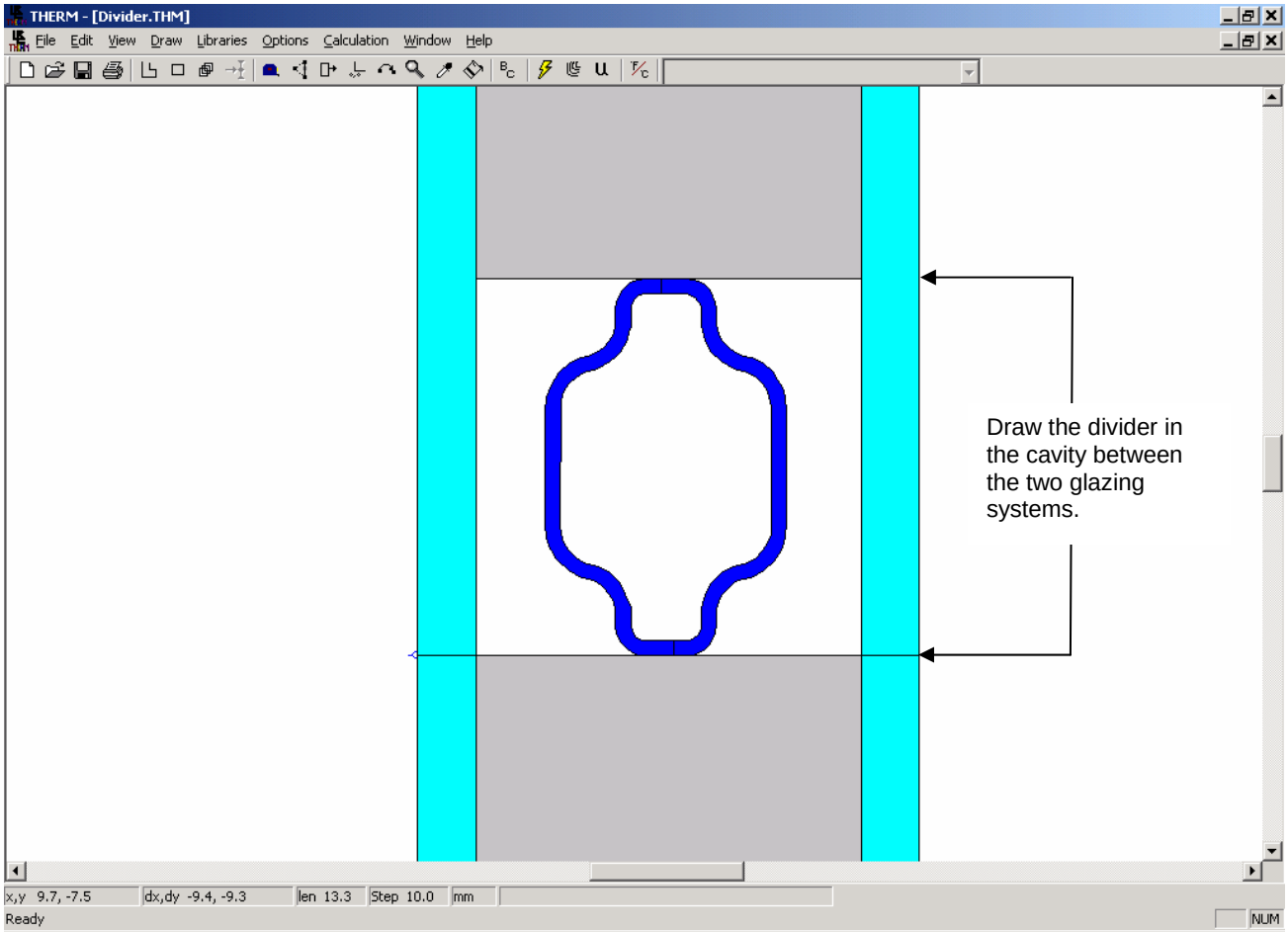

The figure below shows the divider for this example drawn with the material set to Aluminum Alloy

Figure 8-15. Draw the polygons to represent the divider.

5. Fill the cavities between the divider and the glass layers and inside the divider with the material "Frame Cavity NFRC 100-2001". Divide the cavities up according to the 5 mm rule as necessary.

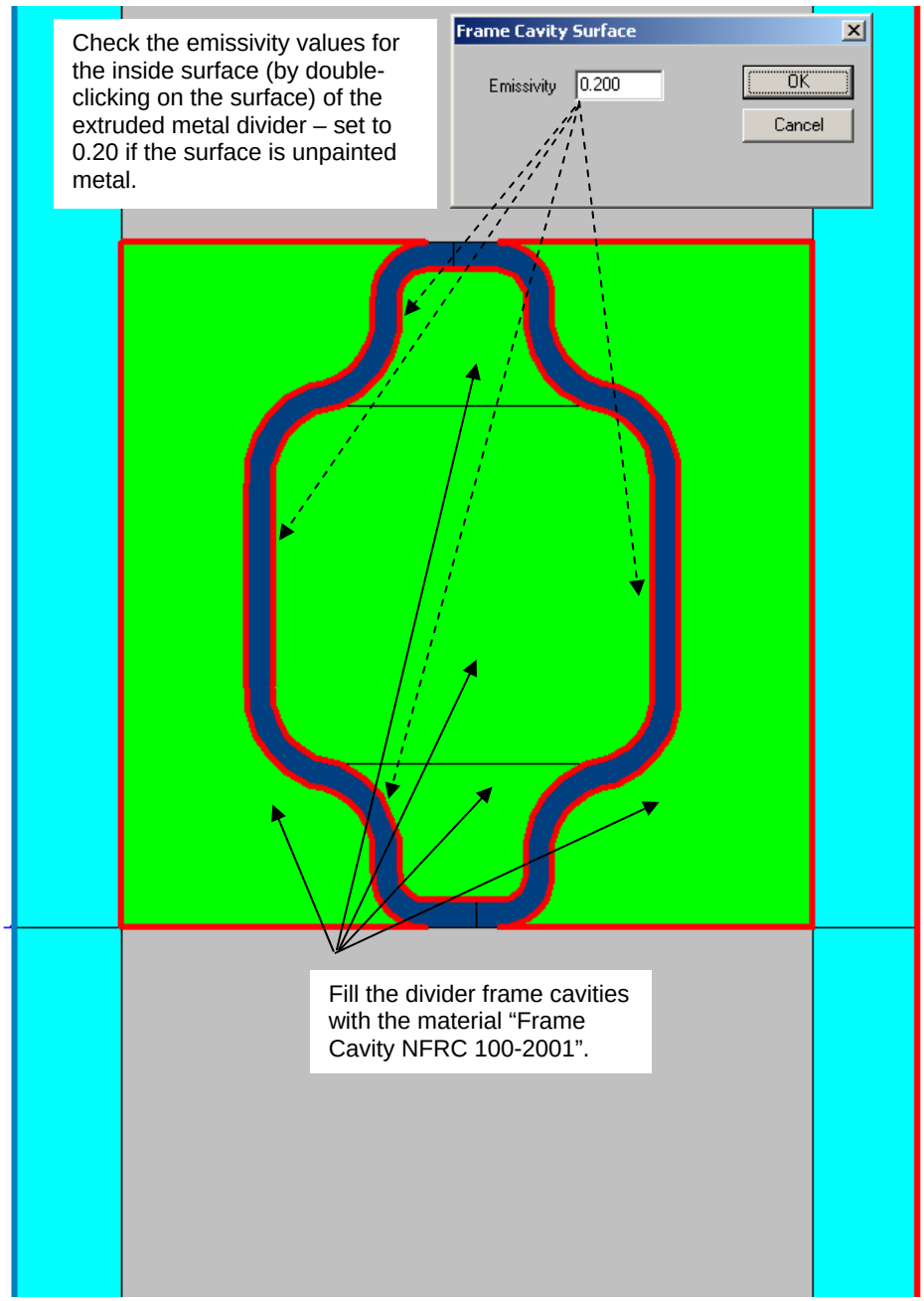

Figure 8-35 Fill the divider frame cavities with Frame Cavity NFRC 100-2001.

6. Define the boundary conditions, using the "AutoEnclosure" choice for the Radiation Model.

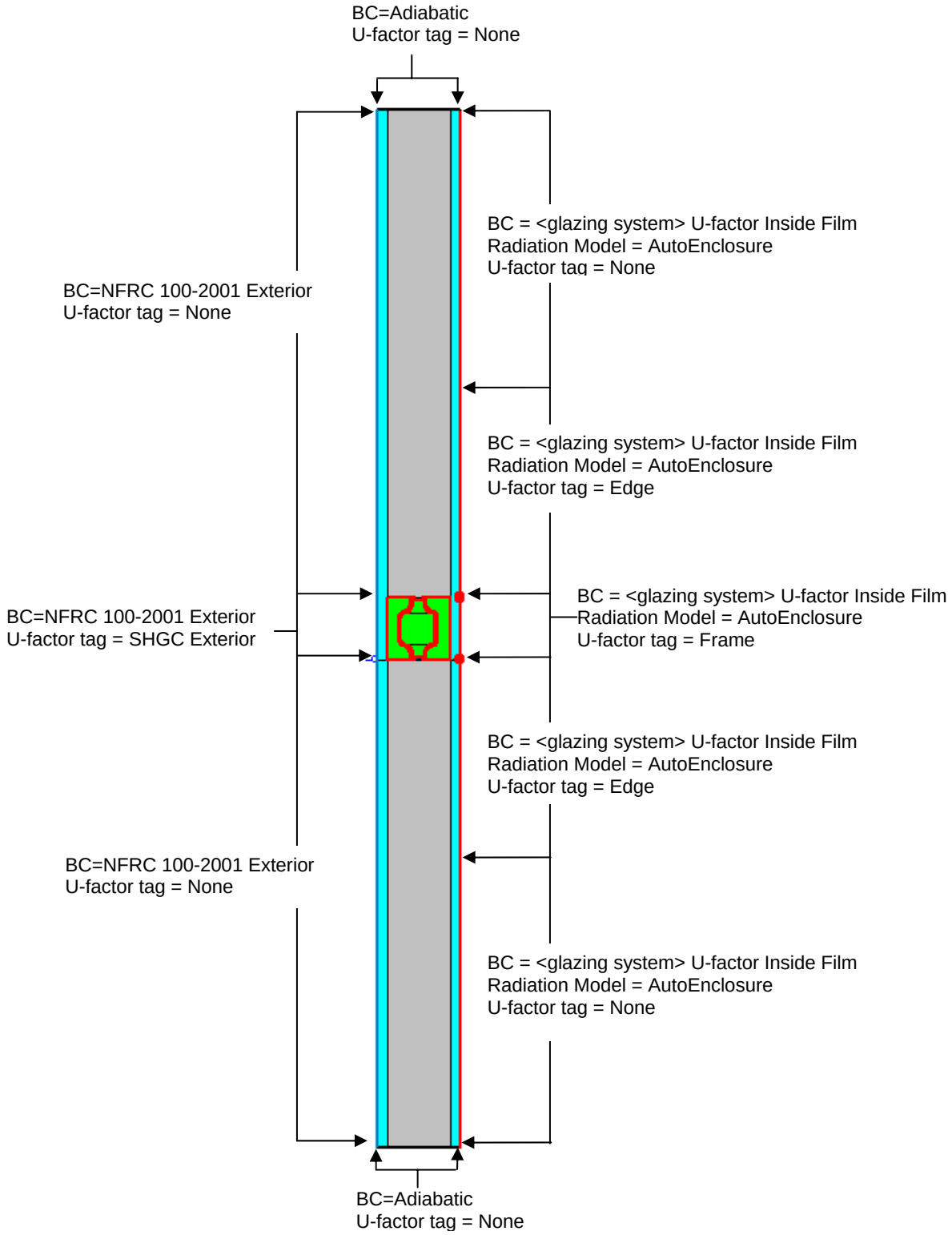

Figure 8-16 Assign the boundary conditions.

6. Calculate the results.

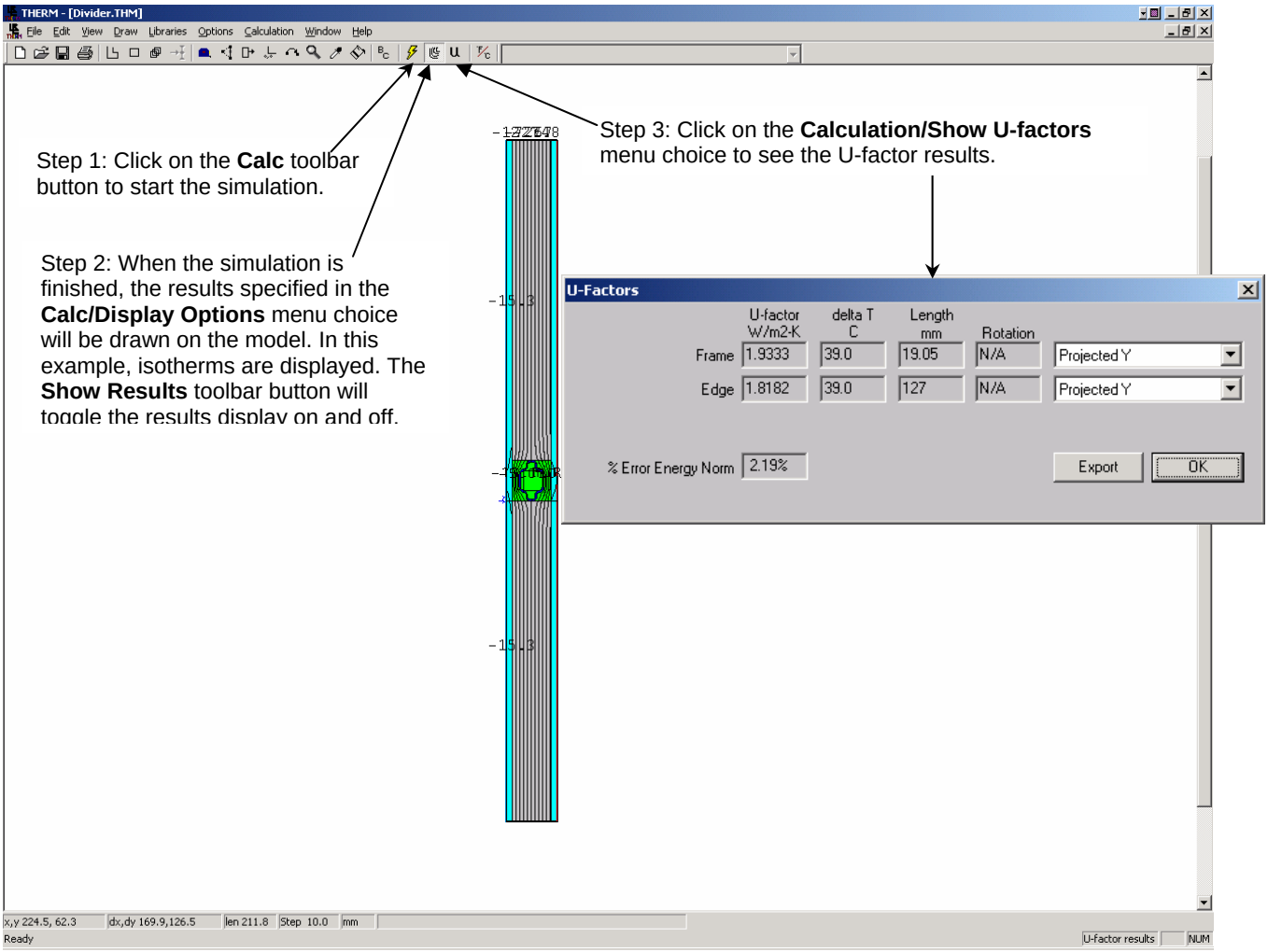

Figure 8-17 Calculate the results.

7. Save the file using the **File/Save As** menu choice.

8. Import the results to the WINDOW Divider Library, as shown below. See Section 4.7.3, "Importing THERM files" in the *WINDOW User's Manual* for more information about importing THERM files.

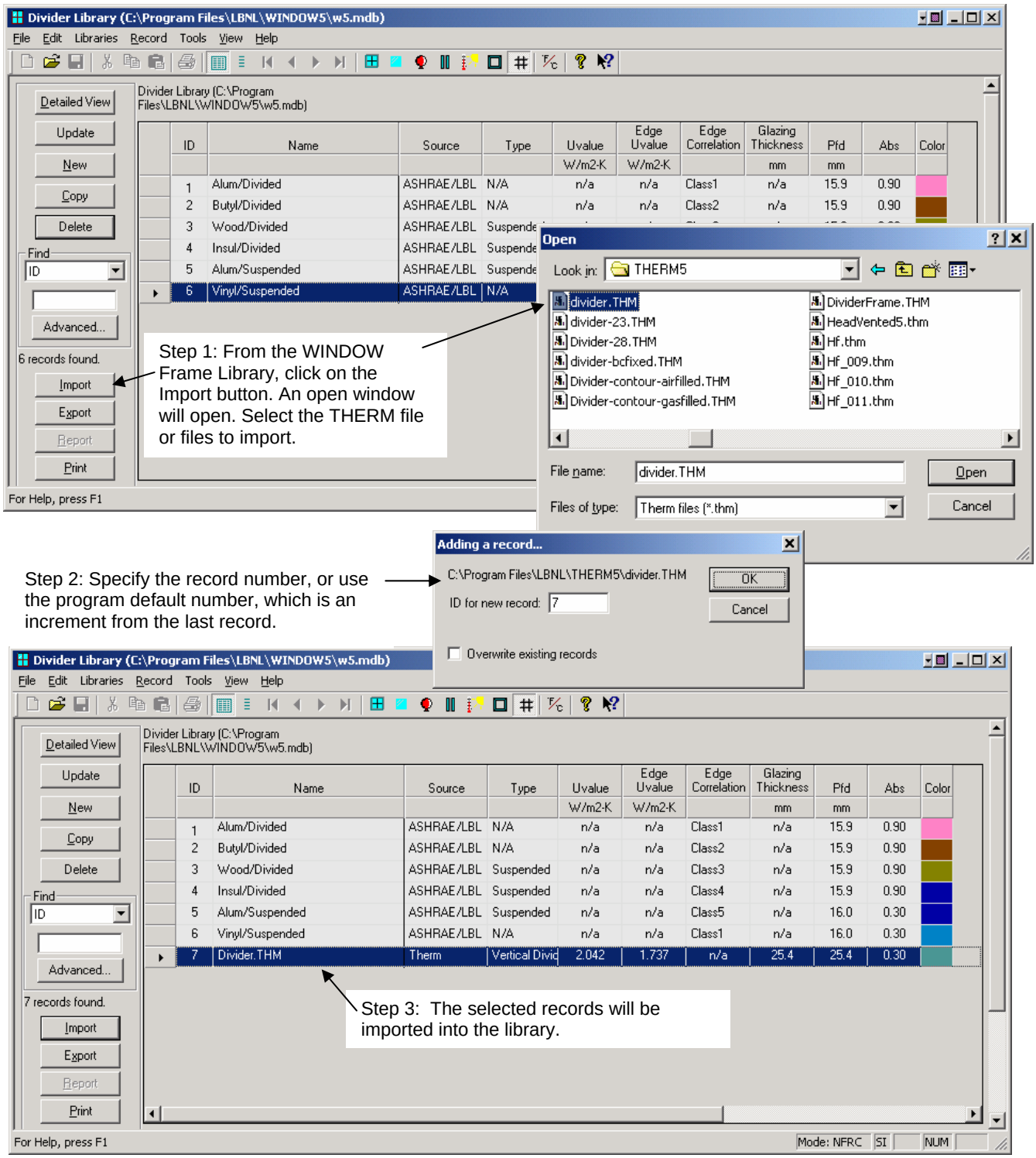

Figure 8-18 Import the THERM file into the WINDOW ***Divider Library****.*

9. Use the new divider in the calculation of the complete product values in the main screen of WINDOW.

..1.3. Gas Filled Glazing Systems

If the glazing system being modeled with a divider is gas-filled, it is necessary to model the divider with the same gas fill as the glazing system. This means a new material must be defined for the gas-filled frame cavities around and inside the divider.

The THERM **Gas Library** contains entries for standard gases, as well as examples of gas mixtures. These gases are not made in THERM; they are made in the WINDOW **Gas Library** and then imported into the THERM **Gas Library**. When the gas mixtures have been imported into THERM, they can be referenced from a new frame cavity material for the divider model, as shown below.

1. Create the gas mixture in the WINDOW **Gas Library**. Presumably it already exists for the product glazing system model. See Section 4.6, "Gas Library" in the *WINDOW User's Manual* for details about creating new entries in the **Gas Library**.

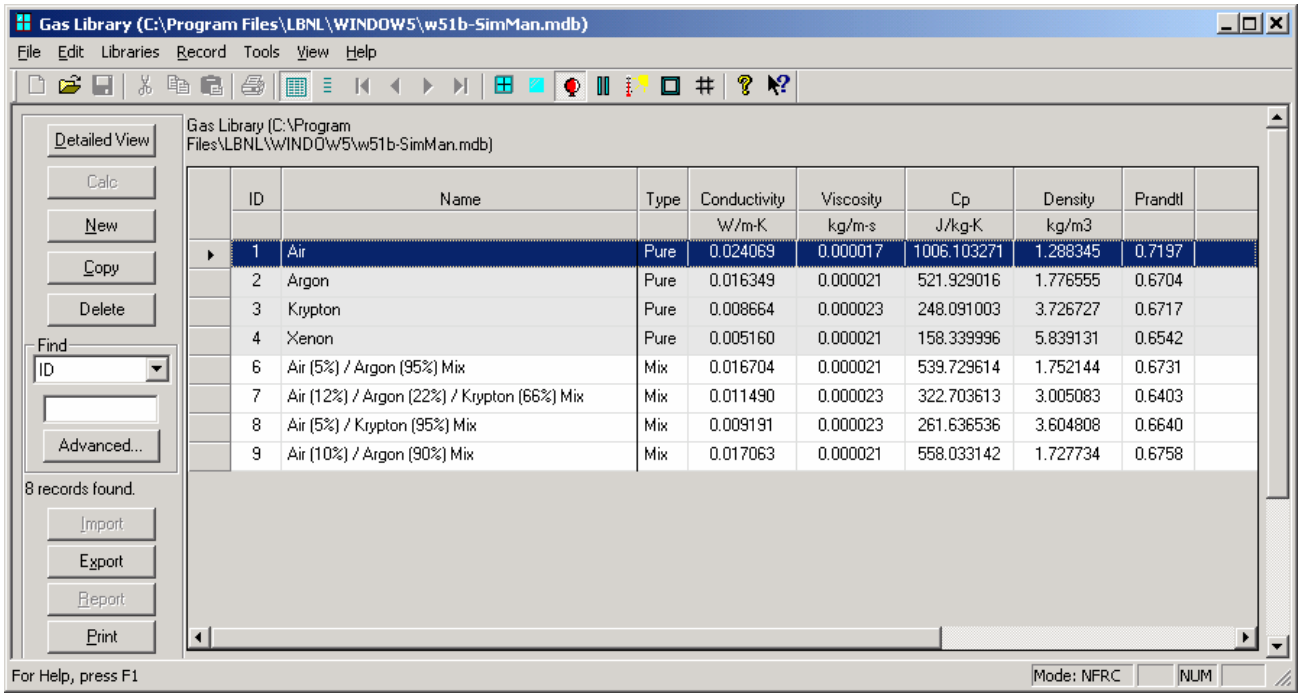

ID	Name	Type	Conductivity W/m-K	Viscosity kg/m-s	Cp J/kg-K	Density kg/m3	Prandtl
1	Air	Pure	0.024069	0.000017	1006.103271	1.288345	0.7197
2	Argon	Pure	0.016349	0.000021	521.929016	1.776555	0.6704
3	Krypton	Pure	0.008664	0.000023	248.091003	3.726727	0.6717
4	Xenon	Pure	0.005160	0.000021	158.339996	5.839131	0.6542
6	Air (5%) / Argon (95%) Mix	Mix	0.016704	0.000021	539.729614	1.752144	0.6731
7	Air (12%) / Argon (22%) / Krypton (66%) Mix	Mix	0.011490	0.000023	322.703613	3.005083	0.6403
8	Air (5%) / Krypton (95%) Mix	Mix	0.009191	0.000023	261.636536	3.604808	0.6640
9	Air (10%) / Argon (90%) Mix	Mix	0.017063	0.000021	558.033142	1.727734	0.6758

Figure 8-19 Make the necessary gas mixture in the WINDOW Gas Library.

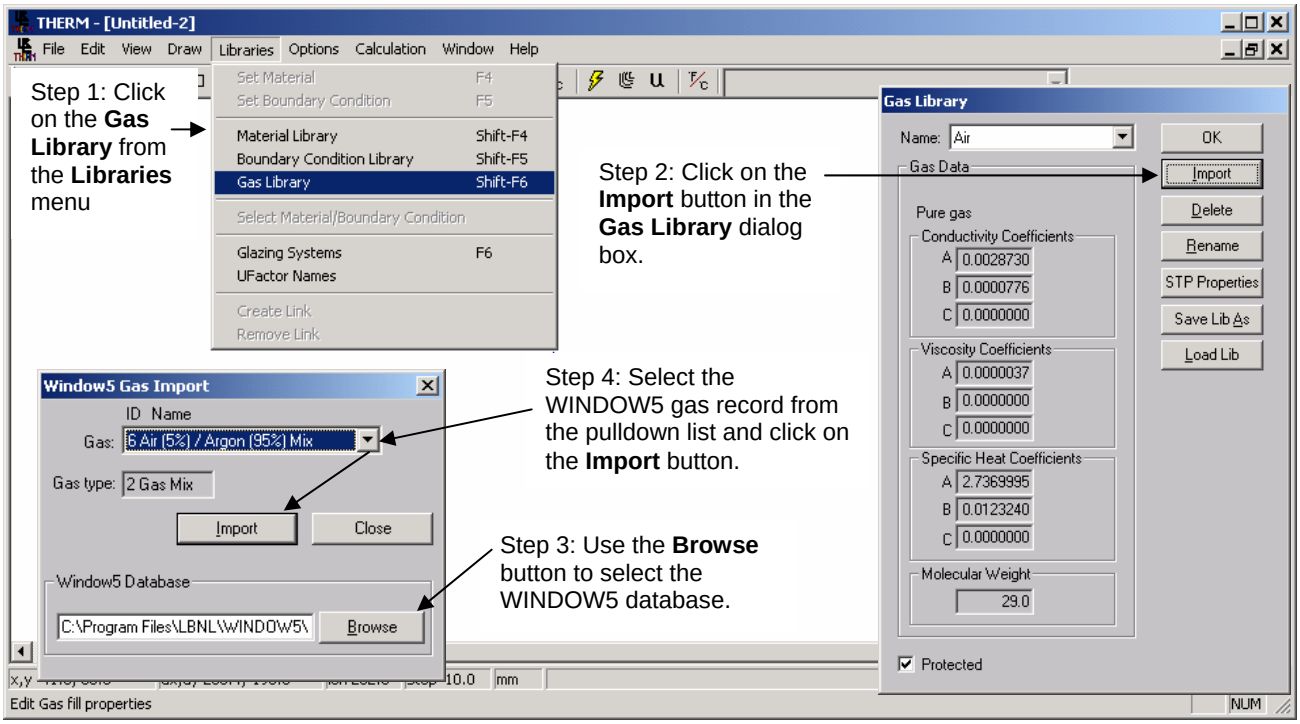

2. Import the WINDOW gas mixture into the THERM **Gas Library**, if it is not already there.

Figure 8-20 Import the gas mixture entries into the THERM Gas Library.

3. Make a new frame cavity material in the THERM **Material Library** based on "Frame Cavity NFRC 100-2001" but with the **Gas Fill** field set to the correct gas mixture from the **Gas Library**.

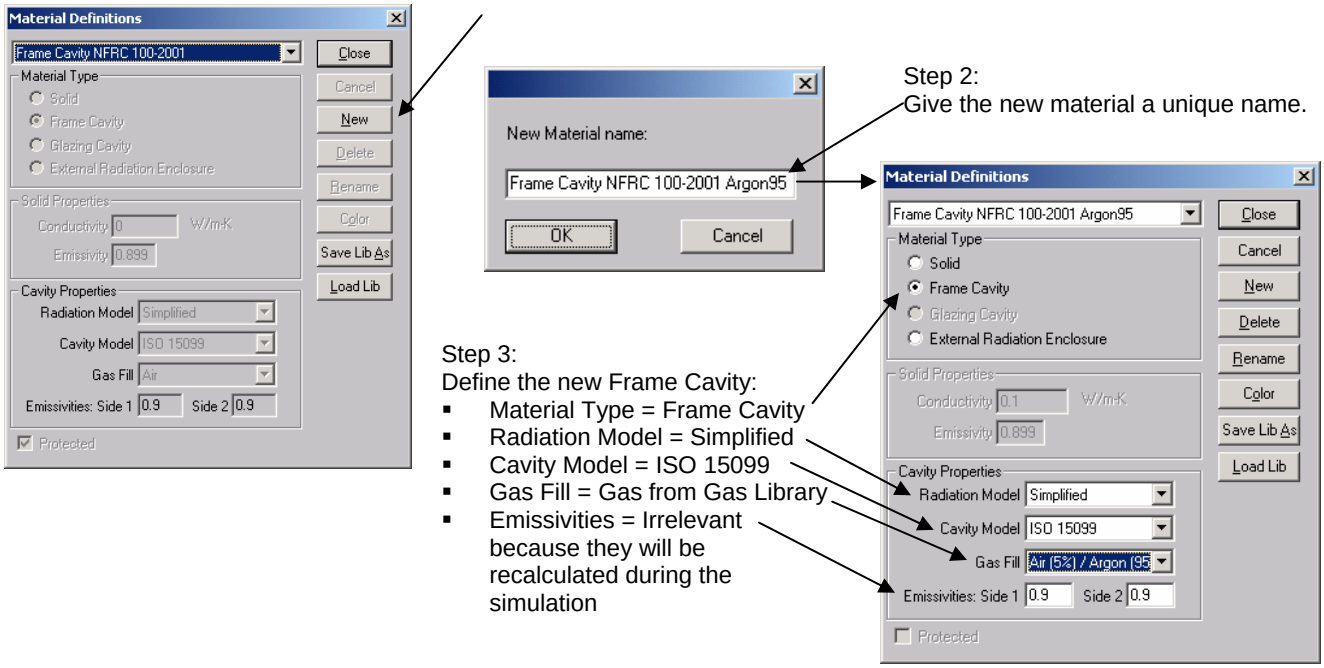

Figure 8-21 Import the gas mixture entries into the THERM Gas Library.

4. Use this new frame cavity material in the divider model cavities.

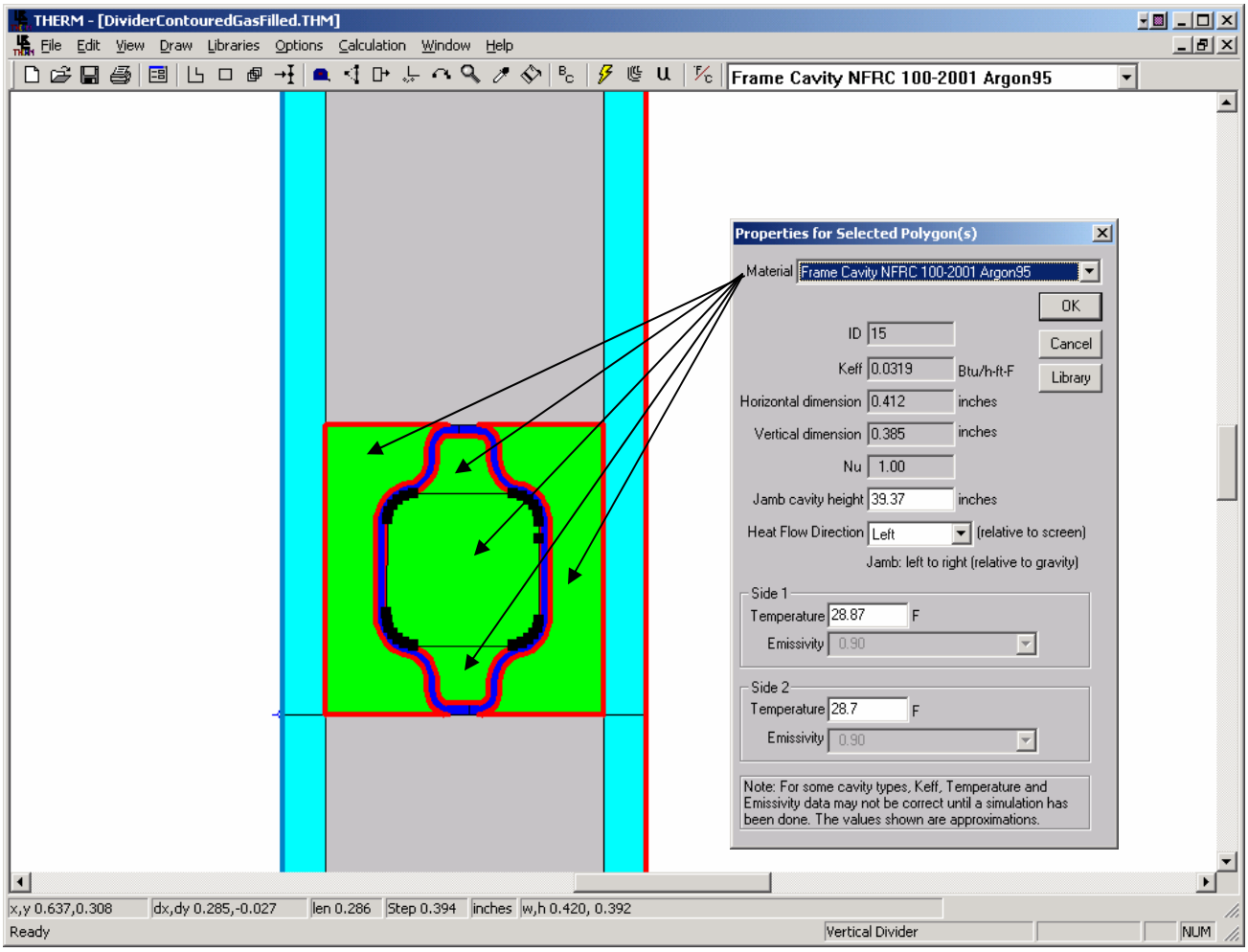

Figure 8-22. Use the new Frame Cavity material to fill the divider cavities.

8.3.2. Simulated Divided Lites

A simulated divided lite is a glazing system that has elements attached to the inside and outside of a glazing system to give the appearance of true divided lites. The glazing system has a metal internal reinforcement, but is all one system.

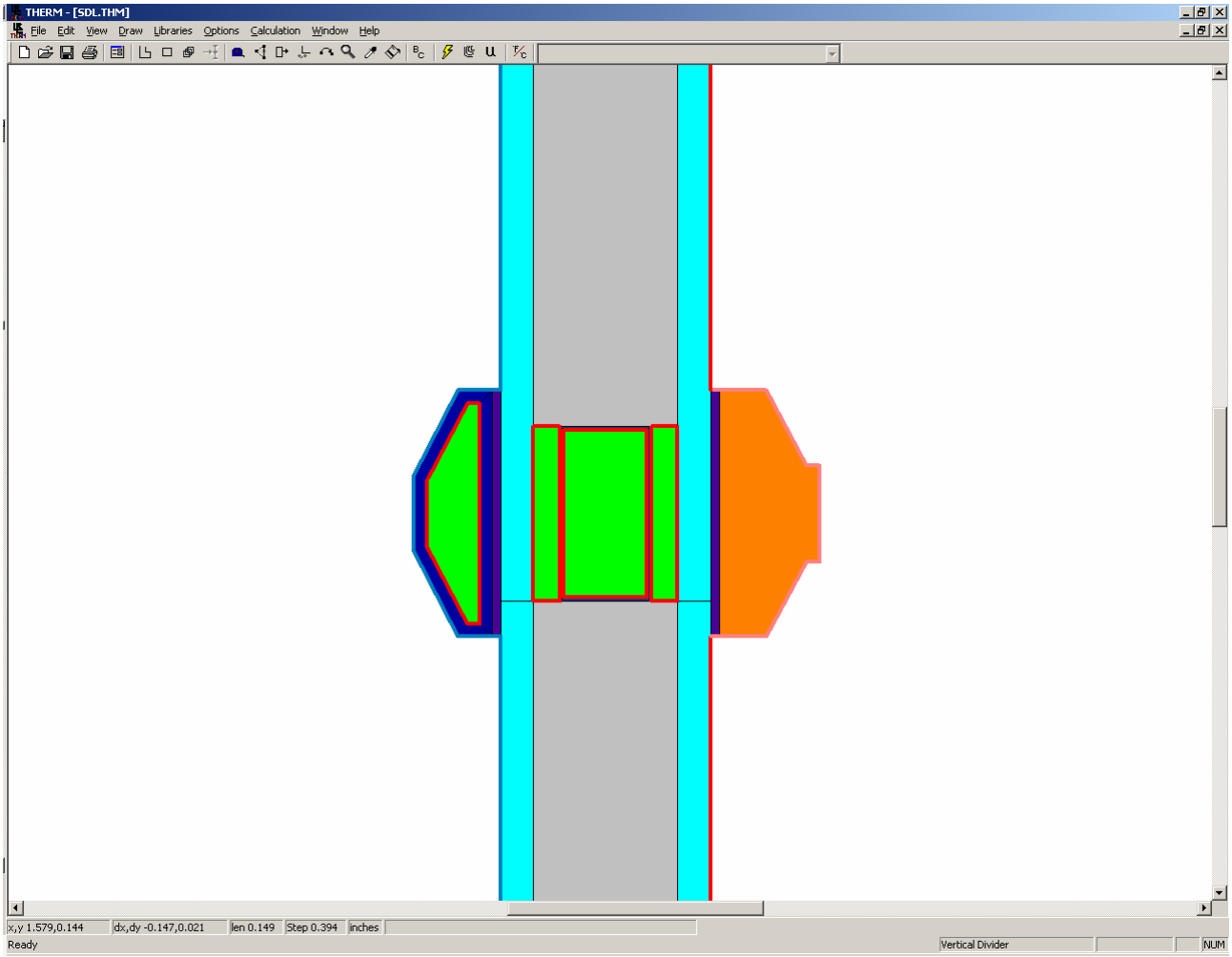

Figure 8-23. A simulated divided lite in THERM.

In THERM:

10. Set the **Cross Section Type** to "Vertical Divider".

11. Import the glazing system for the divider, which is the same glazing system as the rest of the product, with the following settings:
    - **Orientation** = Up
    - **Actual Cavity height** = 1000 mm (39 inches)
    - **Sight line to bottom of glass** = height of the divider (in this example it is 19.05 mm [0.75 inches])
    - **Spacer height** = height of the divider (in this example it is 19.05 mm [0.75 inches)
    - **Edge of Glass Dimension** = 63.5 mm (2.5 inches)
    - **Glazing System Height:** 150 mm (6.0 inches)
    - **Draw spacer** = Not checked

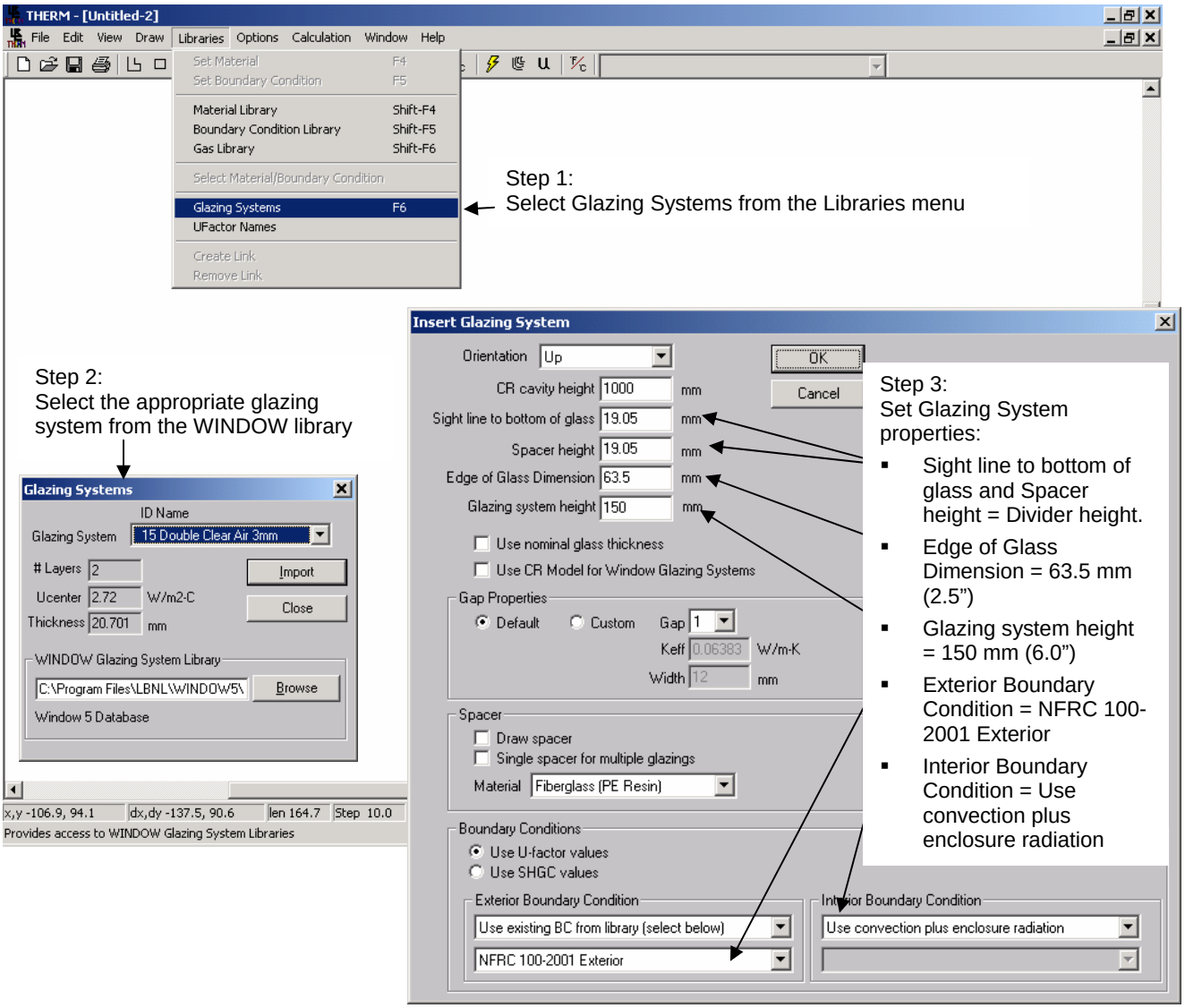

Figure 8-24. Import the first glazing system.

12. Import the glazing system again as an additional glazing system, below the first one (the locator does not have to be moved), but facing down this time. Use the following settings for this glazing system:
    - **Orientation** = Down
    - **Actual Cavity height** = 1000 mm (39 inches)
    - **Sight line to bottom of glass** = 0
    - **Spacer height** = 0
    - **Edge of Glass Dimension** = 63.5 mm (2.5 inches)
    - **Glazing System Height:** 150 mm (6.0 inches)
    - **Draw spacer** = Not checked

    Insert the glazing system as an **Additional Glazing**.

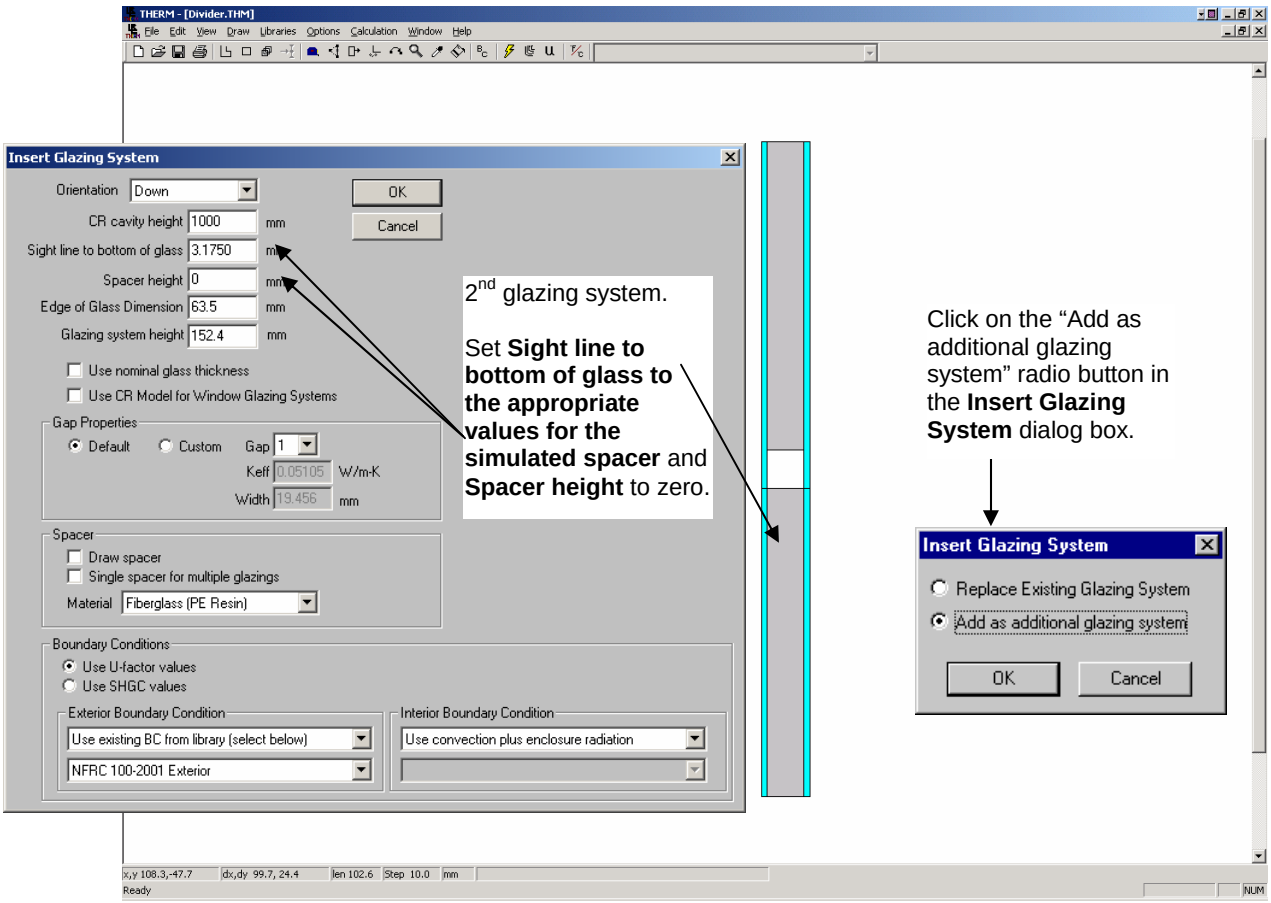

Figure 8-25. Import the second glazing system as an additional glazing system, facing down.

1. Draw (or copy and paste from another THERM file) the polygons in the cavity that represent the divider. The figure below shows the divider for this example drawn with the material set to Aluminum Alloy

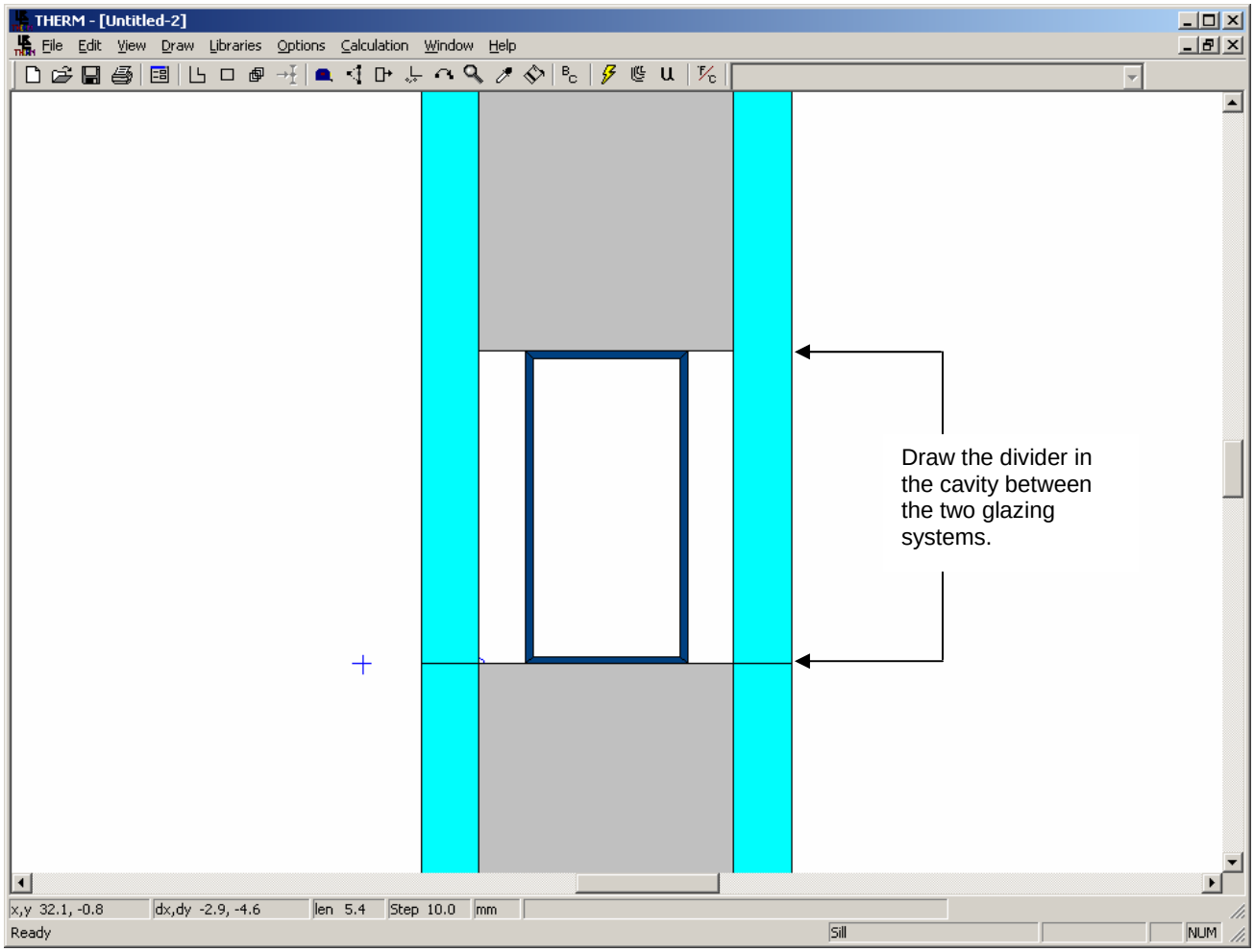

Figure 8-26. Draw the polygons to represent the divider.

2. Fill the cavities between the divider and the glass layers and inside the divider with the material "Frame Cavity NFRC 100-2001". Divide the cavities up according to the 5 mm rule as necessary.

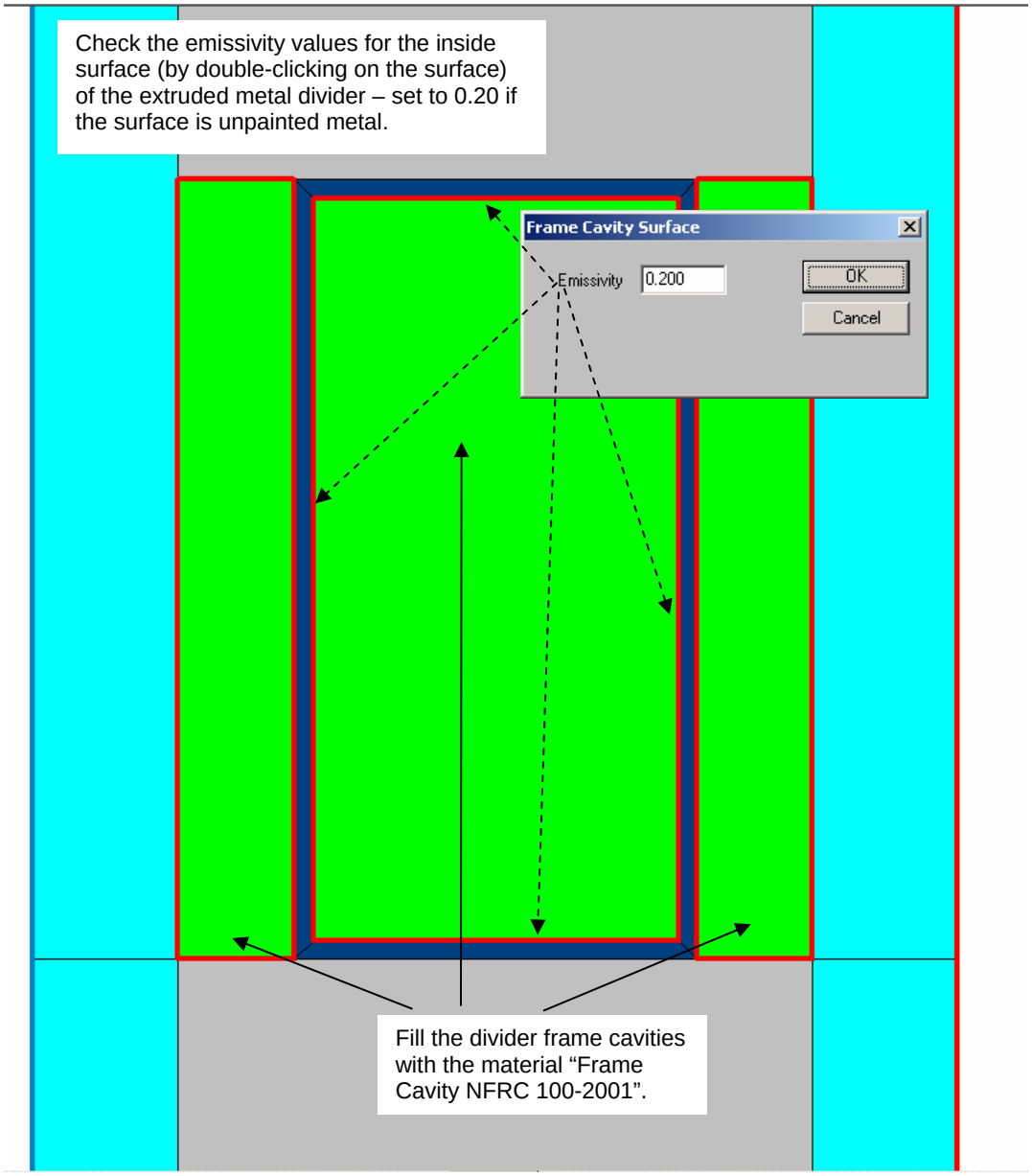

Figure 8-35 Fill the divider frame cavities with Frame Cavity NFRC 100-2001.

7. Add the polygons for the simulated divided light elements on either side of the glazing system and assign the appropriate materials to them.

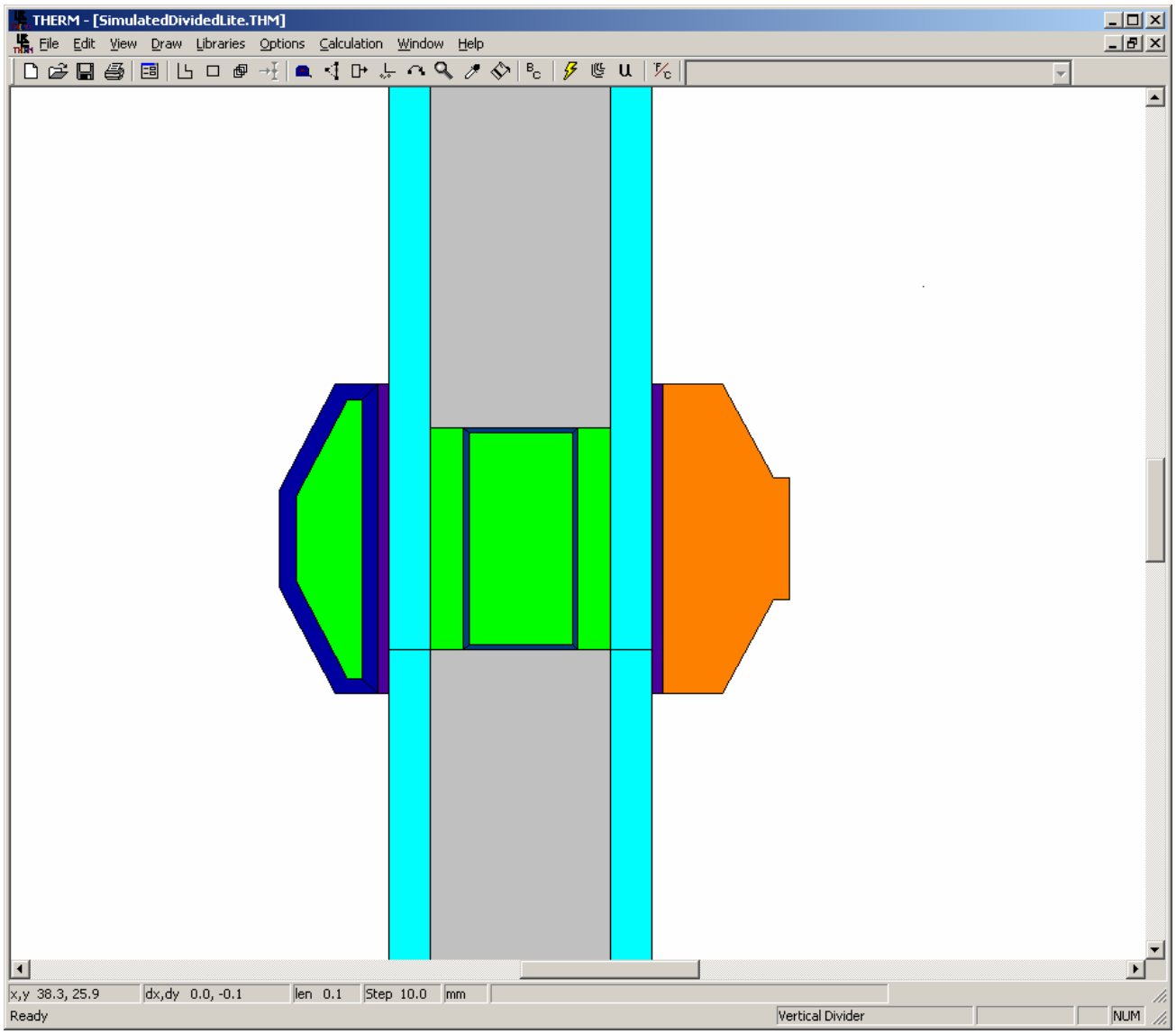

Figure 8-35 Add the polygons for the simulated divided lite elements on either side of the glazing system.

8. Define the boundary conditions, using the "AutoEnclosure" choice for the Radiation Model.

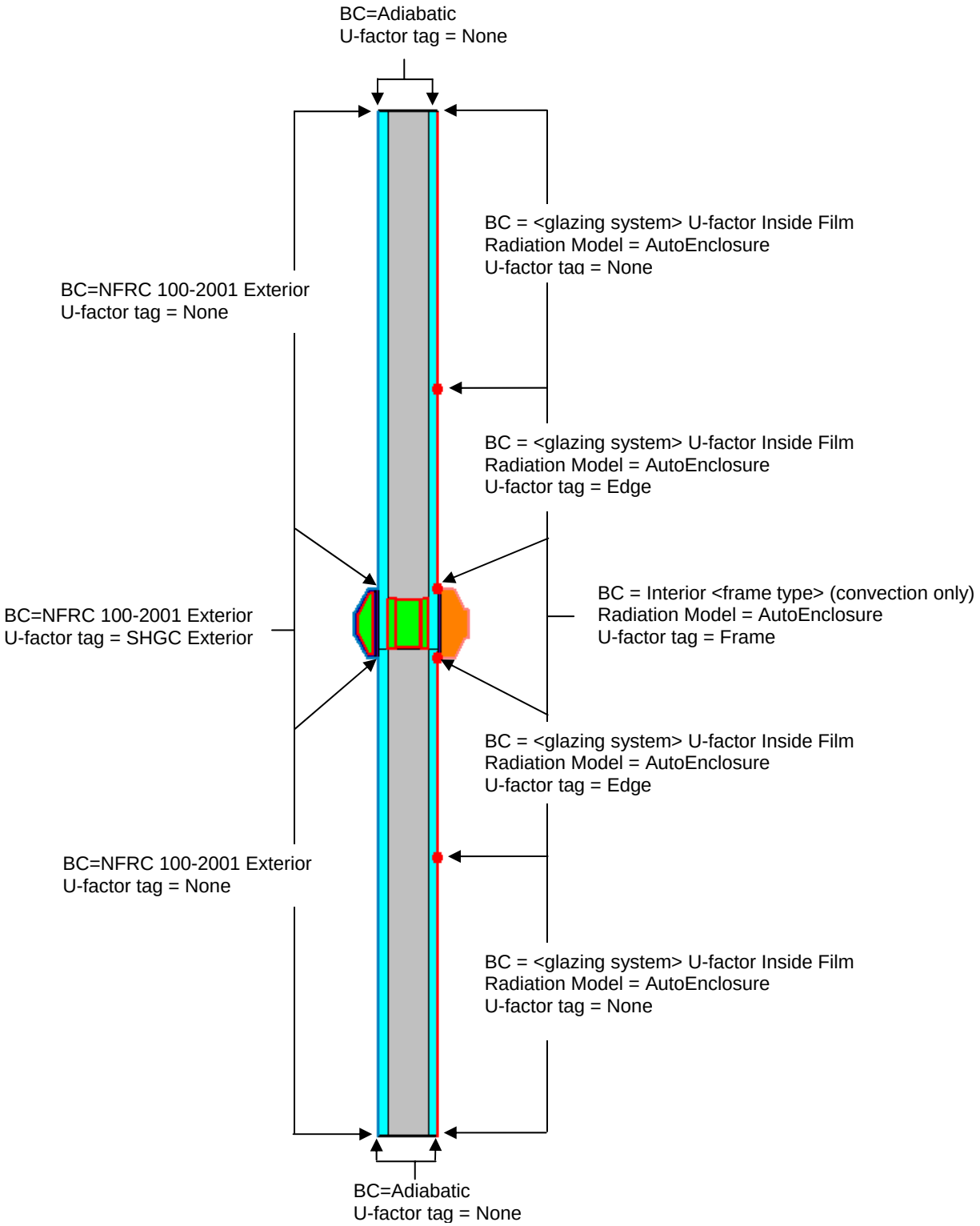

Figure 8-27 Assign the boundary conditions.

3. Calculate the results.

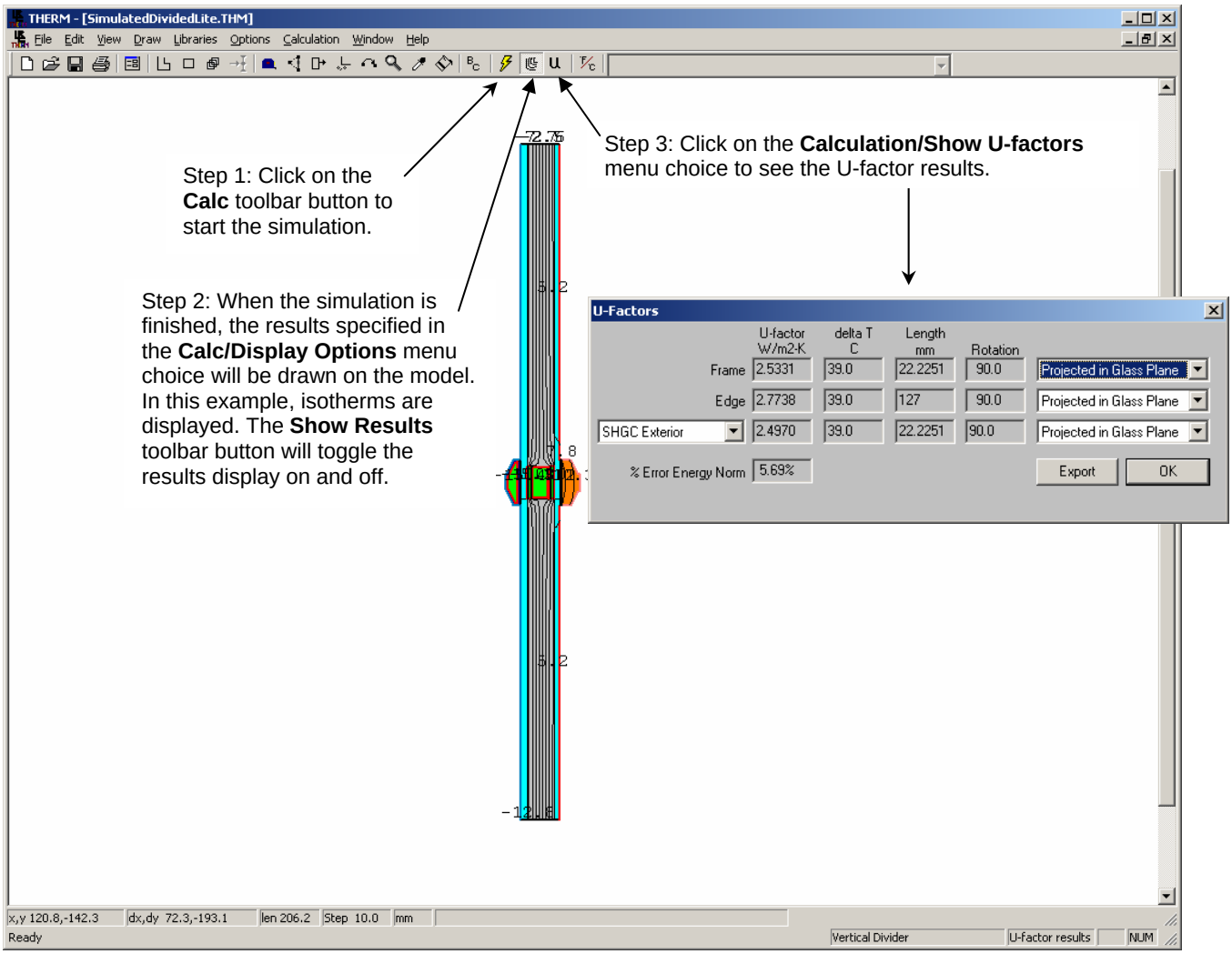

Figure 8-28 Calculate the results.

4. Save the file using the **File/Save As** menu choice.

5. Import the results to the WINDOW Divider Library, as shown below. See Section 4.7.3, "Importing THERM files" in the *WINDO W User's Manual* for more information about importing THERM files.

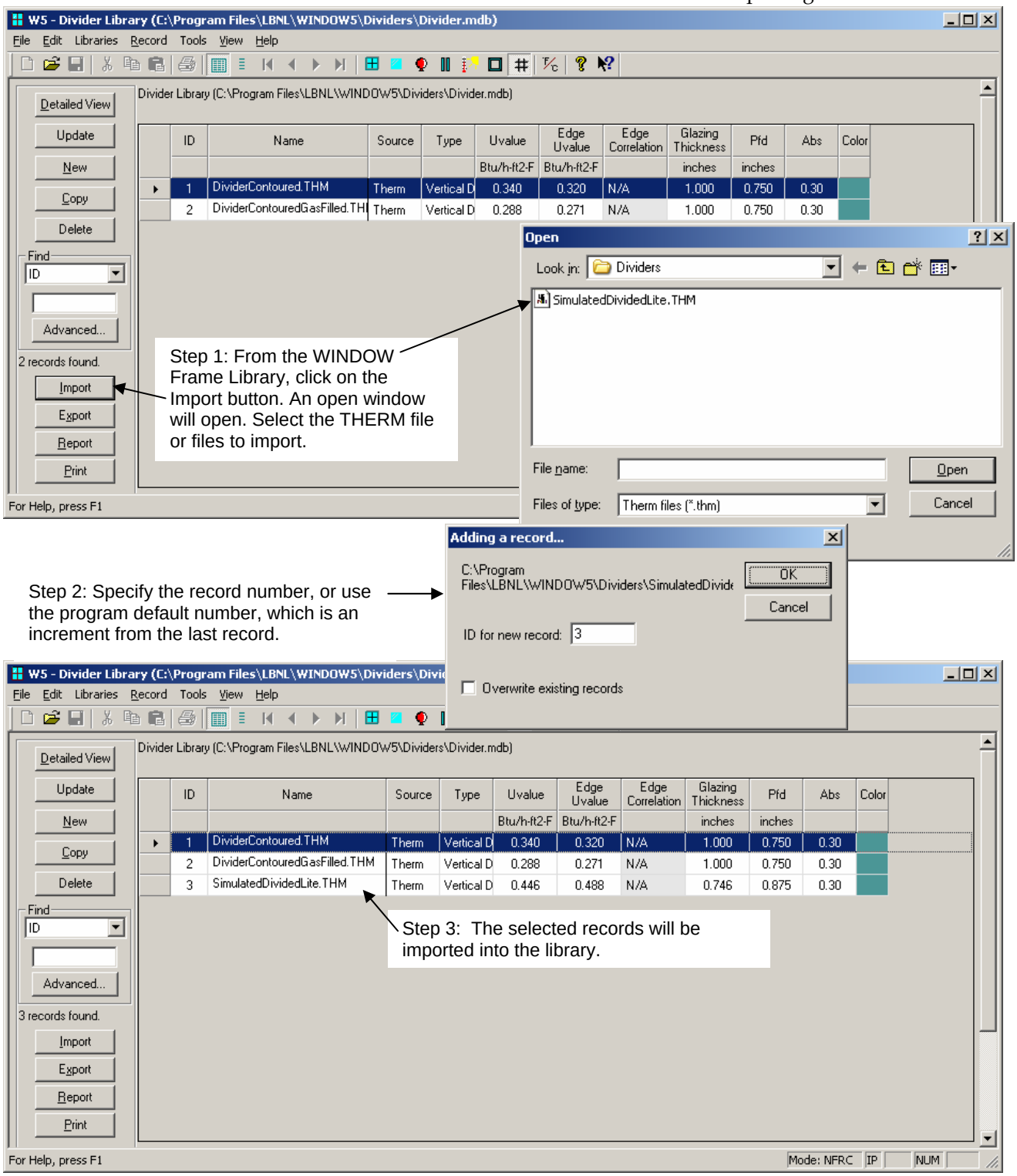

Figure 8-29 Import the THERM file into the WINDOW ***Divider Library****.*

6. Use the new divider in the calculation of the complete product values in the main screen of WINDOW.

8.3.3. True Divided Lites

The criteria for when dividers are modeled can be found in *NFRC 100*, Section 1.4.4, "Simplifications to a Product Line". The discussion below describes the methodologies in WINDOW and THERM for modeling dividers when that criteria is met.

A true divided lite means that the dividers have separate glazing systems between the divider elements, as shown in the figure below.

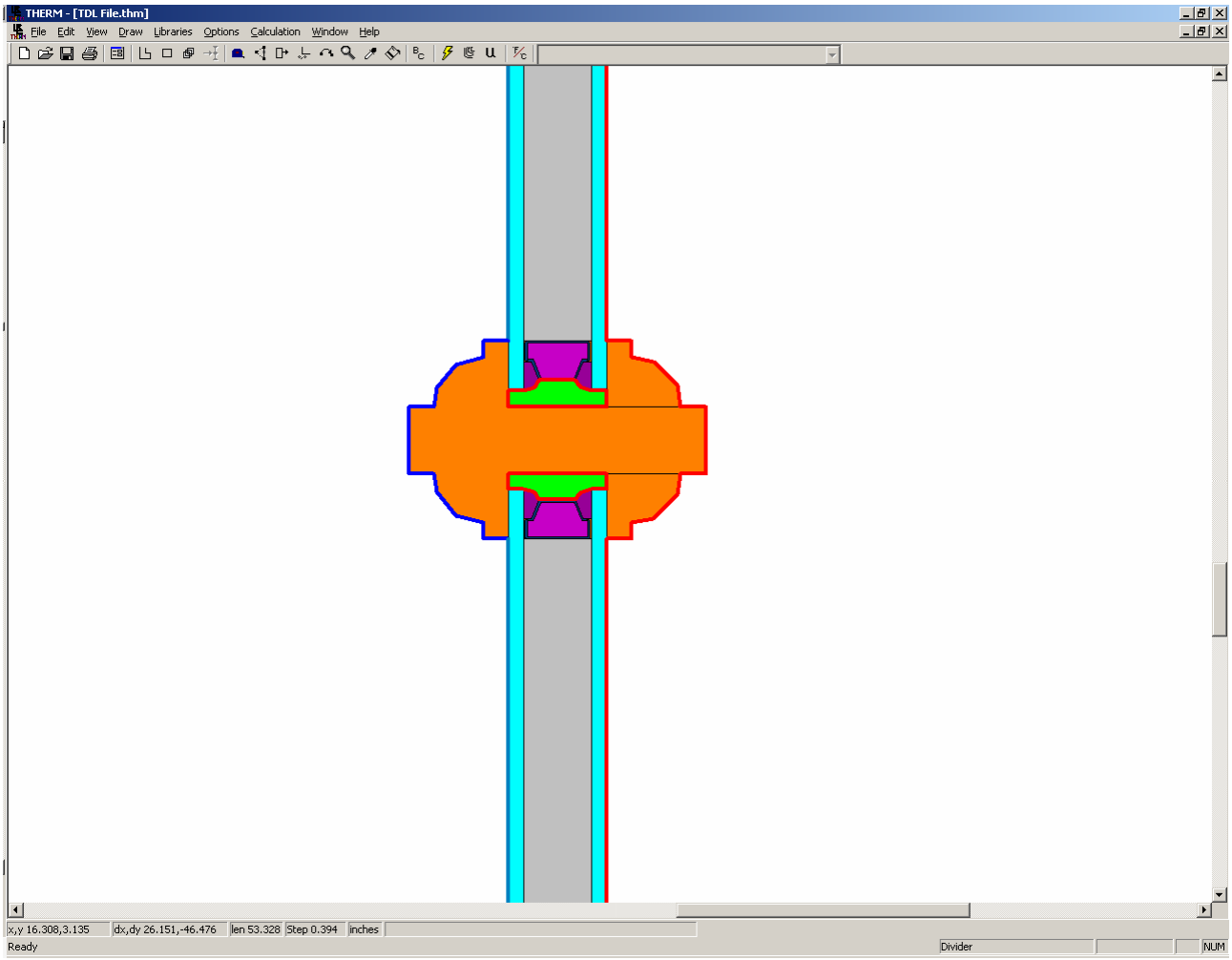

Figure 8-30. A true divided lite in THERM.

In THERM:

In this example, it is easier to start by drawing the polgyons that represent the divider, and then placing the glazing systems relative to those polygons.

1. Set the **Cross Section Type** to "Vertical Divider".
2. Draw the divider polygons as shown in the figure below.

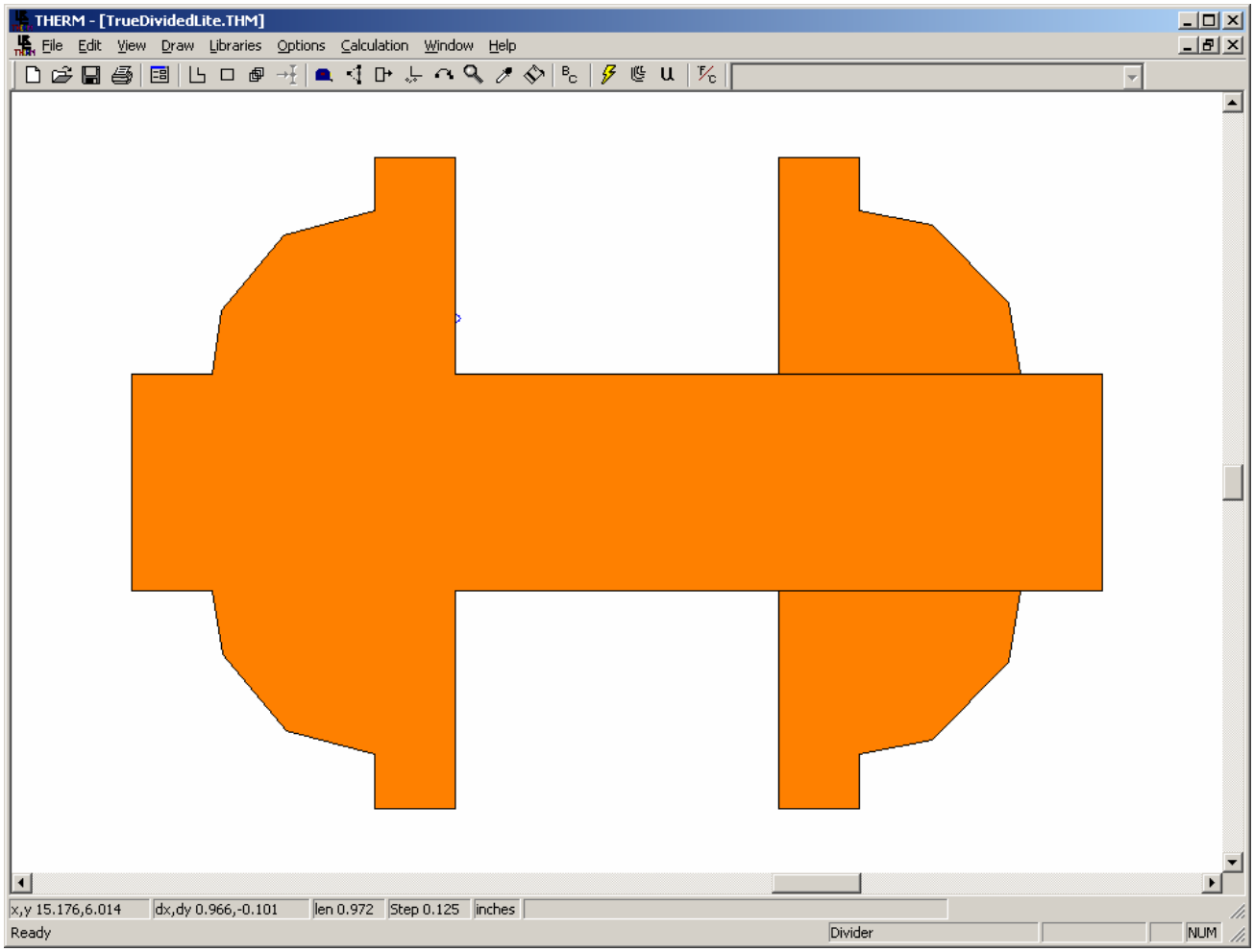

Figure 8-31. In THERM, draw the polygons for the divider elements that the glazing systems will fit into.

3. Import the first glazing system (in this case the top glazing system) for the divider, with the following settings:
   - Set the **Locator** in the appropriate location for where the glazing system will start, in this example 3.175 mm (0.125 inches) above the bottom of the divider
   - **Orientation** = Up
   - **Actual Cavity height** = 1000 mm (39 inches)
   - **Sight line to bottom of glass** = height of the divider (in this example it is 9.525 mm (0.375 inches)
   - **Spacer height** = height of the divider (in this example it is 9.525 mm (0.375 inches)
   - **Edge of Glass Dimension** = 63.5 mm (2.5 inches)
   - **Glazing System Height:** 152.4 mm (6.0 inches)
   - **Draw spacer** = Not checked

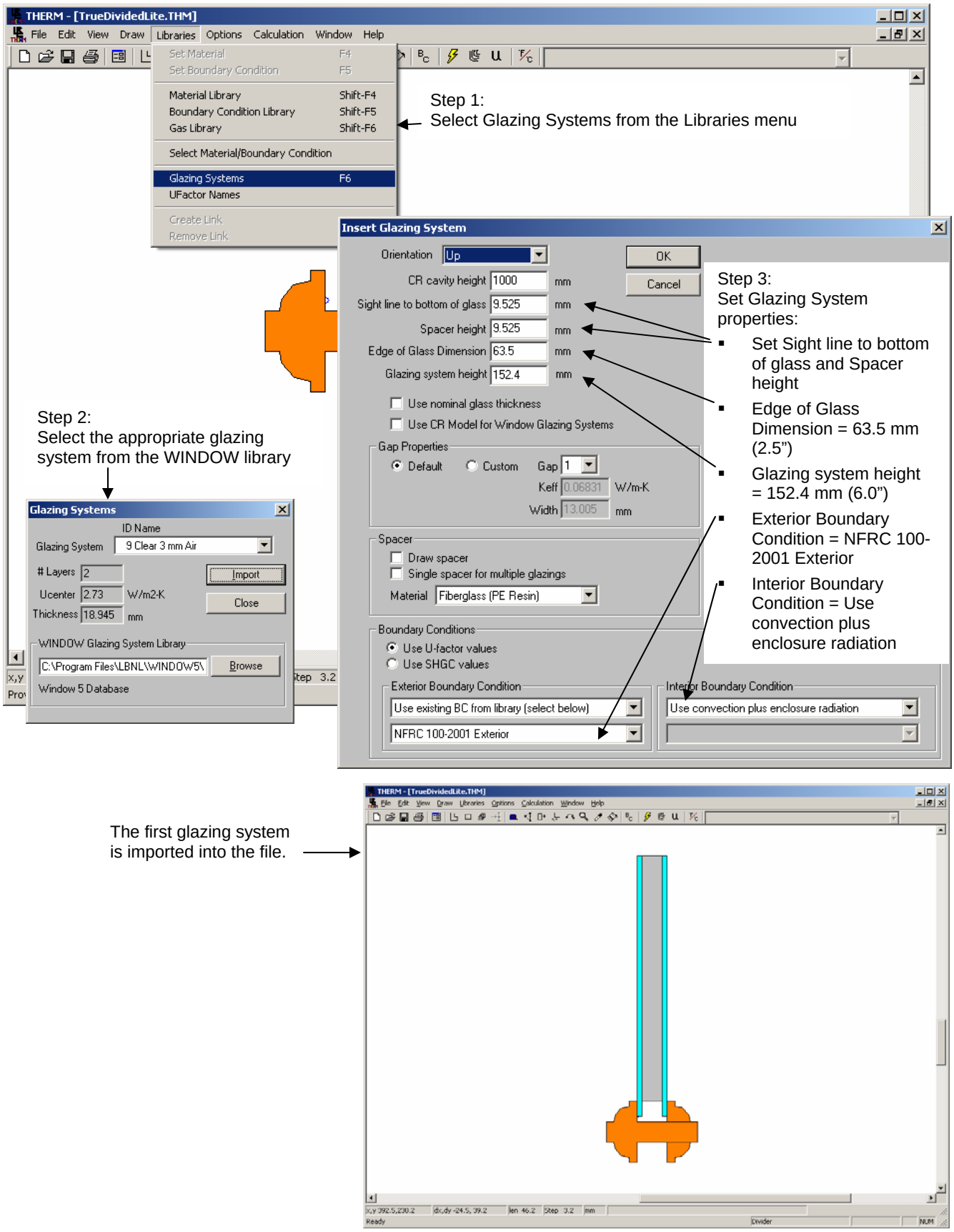

Figure 8-32. Import the first glazing system.

4. Import the glazing system again as an additional glazing system, facing down this time. Use the following settings for this glazing system:
   - Set the **Locator** in the appropriate location for where the glazing system will start, in this example 3.175 mm (0.125 inches) above the bottom of the divider
   - **Orientation** = Down
   - **Actual Cavity height** = 1000 mm (39 inches)
   - **Sight line to bottom of glass** = height of the divider (in this example it is 9.525 mm (0.375 inches)
   - **Spacer height** = height of the divider (in this example it is 9.525 mm (0.375 inches)
   - **Edge of Glass Dimension** = 63.5 mm (2.5 inches)
   - **Glazing System Height:** 150 mm (6.0 inches)
   - **Draw spacer** = Not checked

   Insert the glazing system as an **Additional Glazing**.

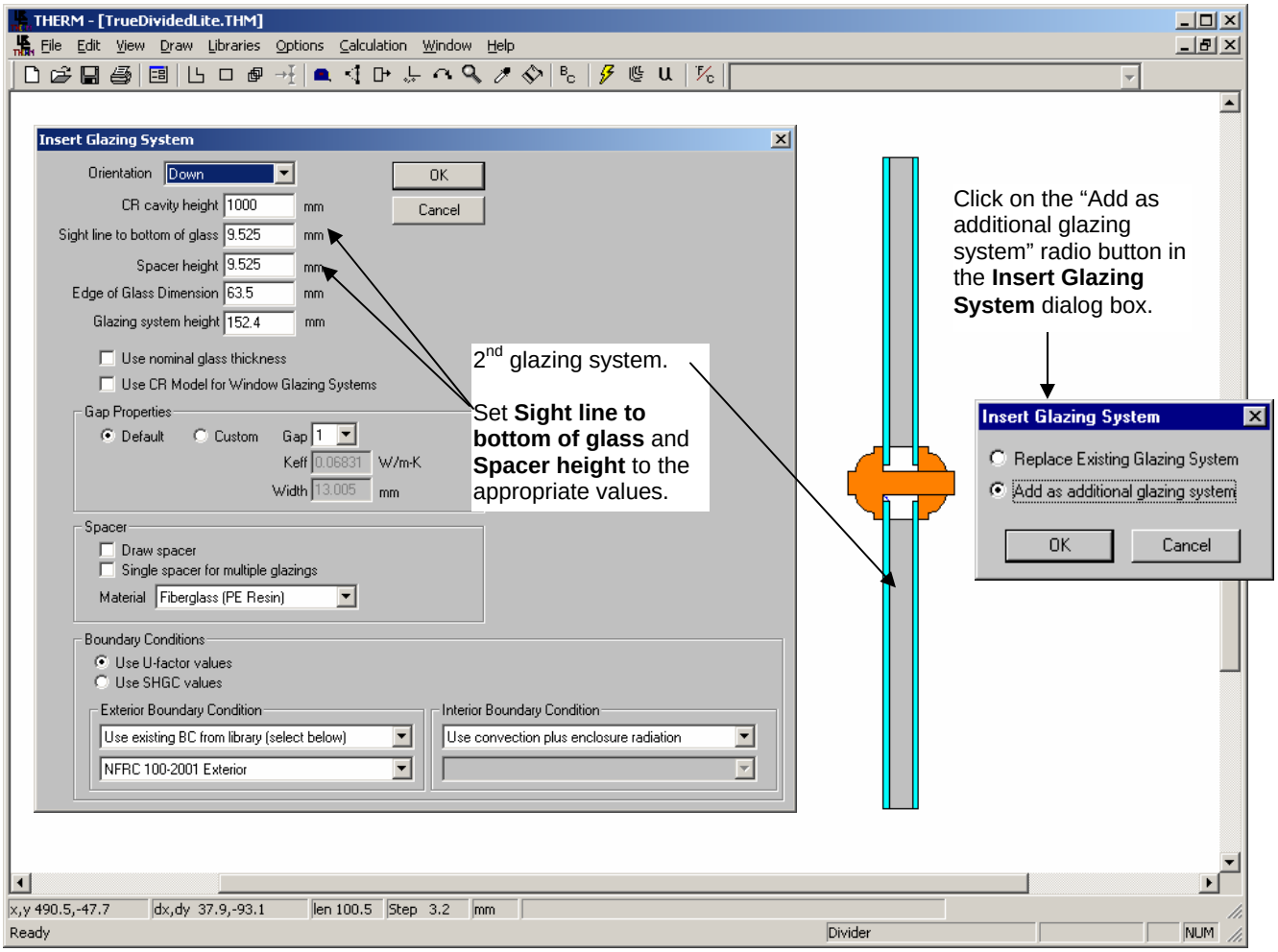

Figure 8-33. Import the second glazing system as an additional glazing system, facing down.

5. Add the spacers, sealants, desiccants, and frame cavities as appropriate.

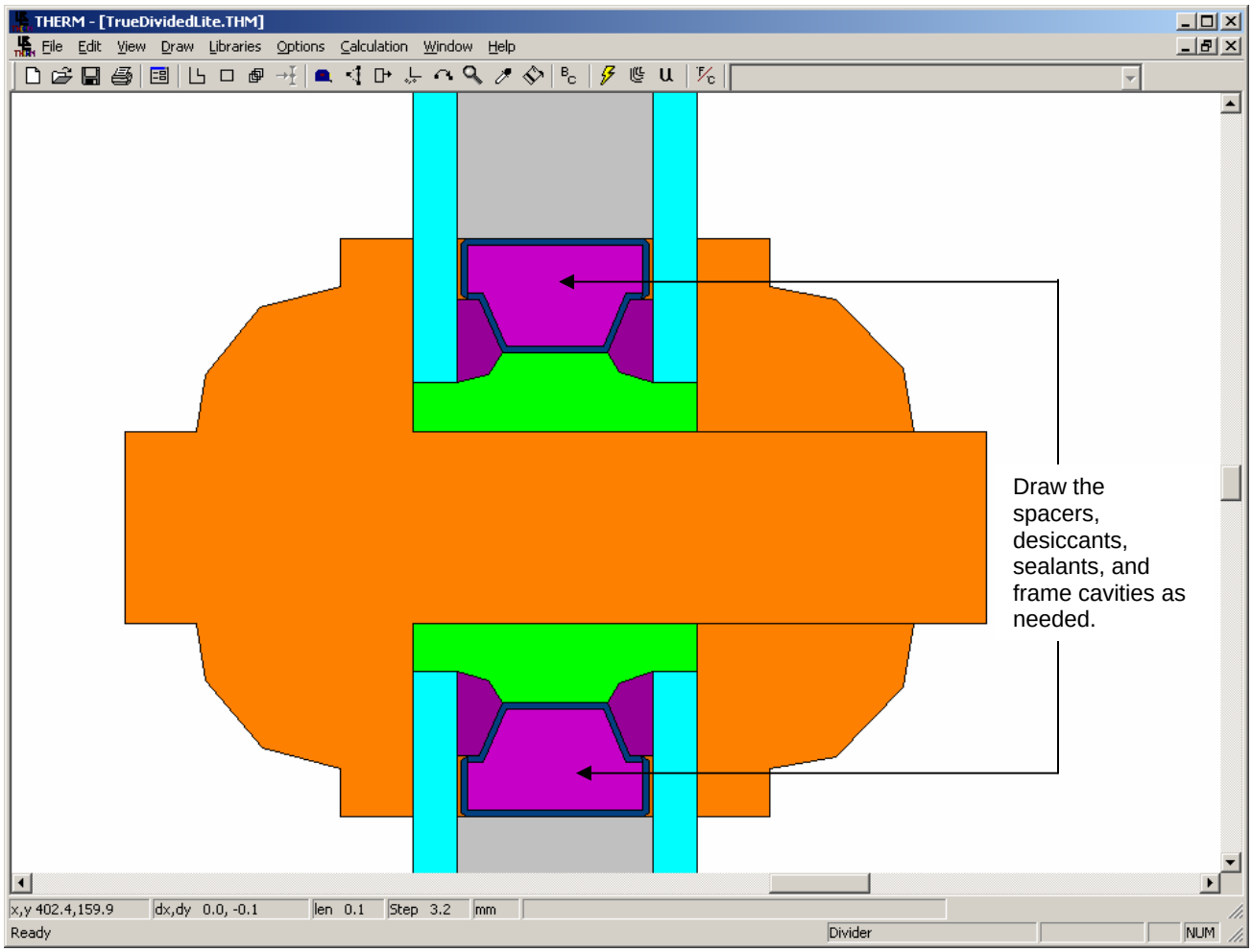

Figure 8-34. Draw the polygons to represent the divider.

6. Define the boundary conditions, using the "AutoEnclosure" choice for the Radiation Model.

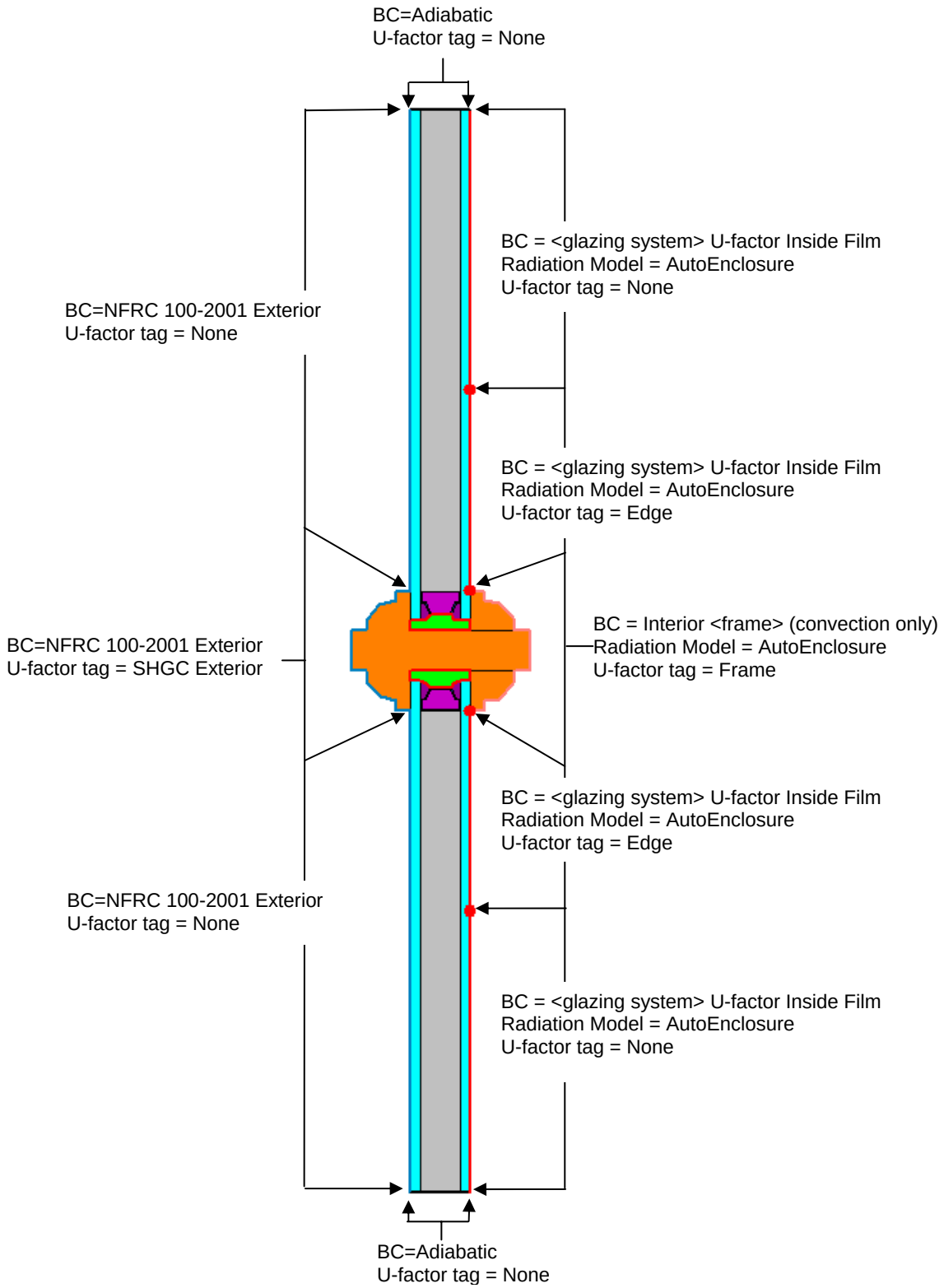

Figure 8-35 Assign the boundary conditions.

6. Calculate the results.

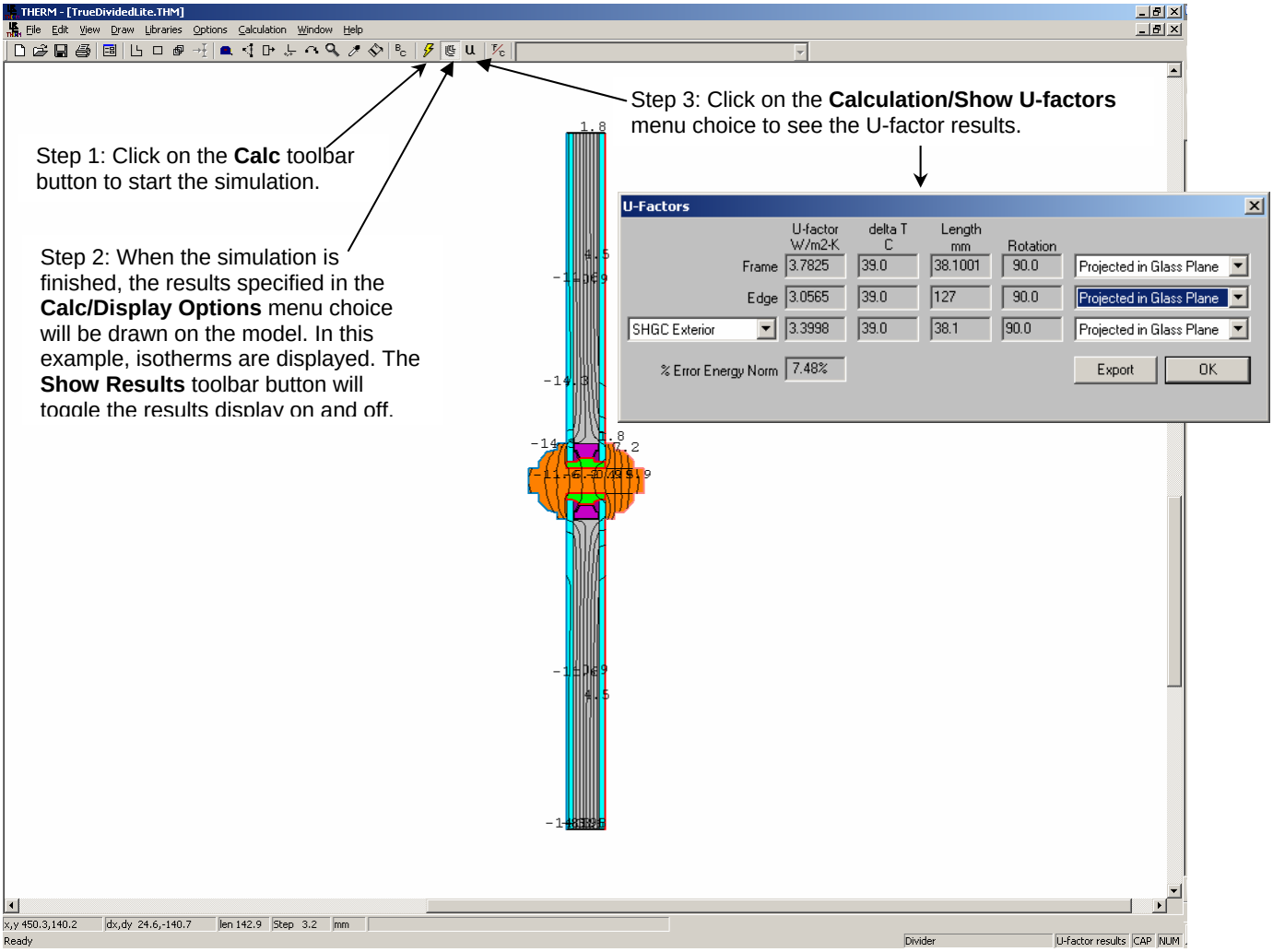

Figure 8-36 Calculate the results.

7. Save the file using the **File/Save As** menu choice.

8. Import the results to the WINDOW Divider Library, as shown below. See Section 4.7.3, "Importing THERM files" in the *WINDOW User's Manual* for more information about importing THERM files.

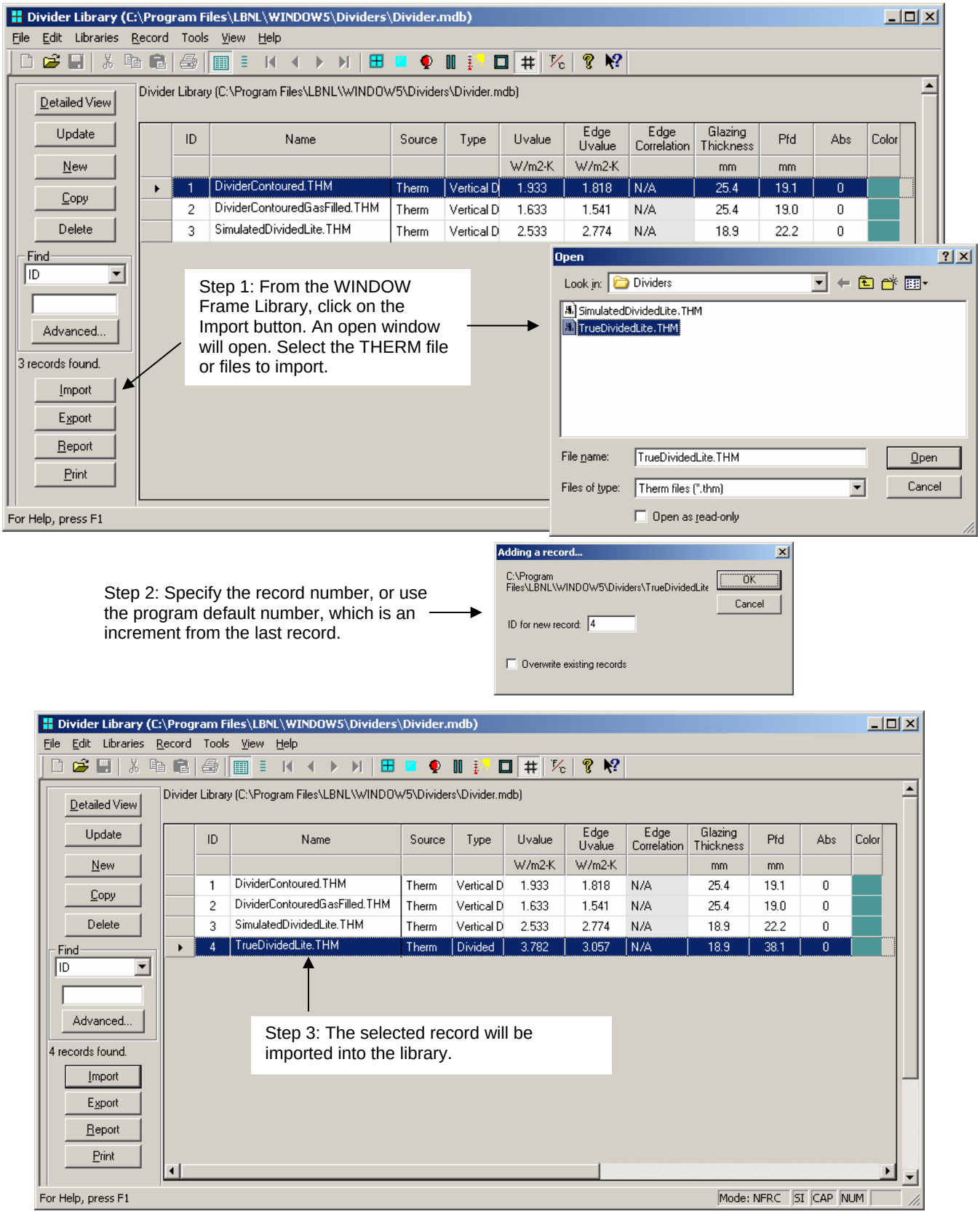

Figure 8-37 Import the THERM file into the WINDOW ***Divider Library****.*

9. Use the new divider in the calculation of the complete product values in the main screen of WINDOW.

8.4 Storm Windows

Storm windows present a modeling problem different from most insulated glass (IG) units, because the spacing between the IG unit and the storm window is usually quite large, as shown in the figure below. As with all other product modeling, all relevant cross sections (head, sill, jambs, meeting rails and dividers) must be modeled in THERM.

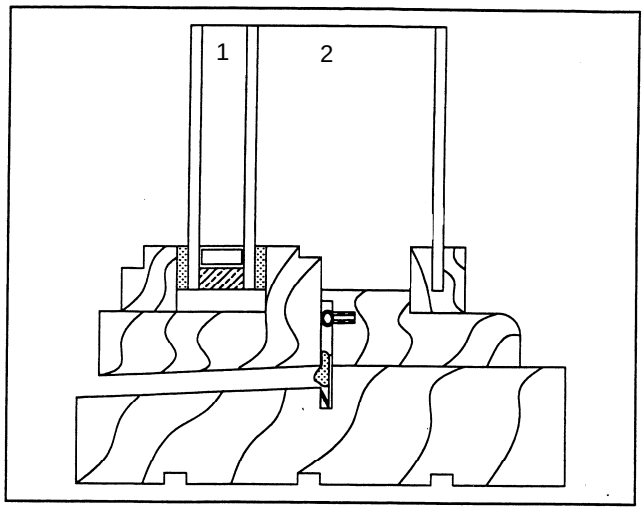

Figure 8-38 Product with an interior storm window.

8.4.1. Modeling Steps

The following steps can be used to model storm windows. These steps are discussed in more detail in the following sections.

If the product is *NOT* a single or double hung (i.e., it is a casement, fixed, picture, transom, awning, etc), do the following:

In WINDOW:

- Create a three-layer glazing system with the correct spacing between each of the glass layers in WINDOW.

In THERM

- Draw the frame components for the product in THERM.
- Import the glazing system into THERM
  Edge of Glass Dimension = 63.5 mm (2.5 inch)
  Glazing System Height = 150 mm (6.0 inch).
- Fill the air cavity below the glazing system and use the Library/Create Link feature to link that air cavity to the glazing cavity.
- Assign the boundary conditions
  Exterior Boundary Condition = **Use existing BC from library,** select "NFRC 100-2001 Exterior", and assign the **SHGC Exterior** U-factor tag to the exterior frame components
  Interior Boundary Condition = Use "convection plus enclosure radiation" for Glazing System, use appropriate "convection only" frame boundary condition for the frame components.
- Simulate the problem

If the product *IS* a single or double hung (i.e., a vertical or horizontal slider), where there will be a different gap width between the glazing system and the storm window for different frame profiles, do the following:

In WINDOW:

- Create three three-layer glazing systems as follows:
- One glazing system with a gap width between the glazing and the storm window that is the average of the gaps of the entire product.
- Two glazing systems, with the correct spacing between each of the glazing system and the storm window, for each of the frame profiles that will be modeled in THERM.

In THERM

- Draw the frame components for the product in THERM.
- Import the glazing systems with the actual gap widths into the appropriate frame profiles with the following settings:
  Edge of Glass Dimension = 63.5 mm (2.5 inch)
  Glazing System Height = 150 mm (6.0 inch).
- Edit the Keff values for each glazing system cavity to match that of the first "average-gap" glazing system made in WINDOW. Do this by double clicking on the glazing system.
- Fill any air cavity between the bottom of the glazing system and the top of the frame profile as necessary, and use the Library/Create Link feature to link that air cavity to the glazing cavity.
- Assign the boundary conditions
  Exterior Boundary Condition = **Use existing BC from library,** select **"**NFRC 100-2001 Exterior", and assign the **SHGC Exterior** U-factor tag to the exterior frame components
  Interior Boundary Condition = Use "convection plus enclosure radiation" for Glazing System, use appropriate "convection only" frame boundary condition for the frame components.
- Simulate the problem

In WINDOW:

- Import the THERM frame profiles that have the correct geometry for the glazing systems. Copy each record and edit the glazing system thickness to match the thickness of the "average-gap" glazing system in WINDOW.
- In the Window Library, create a product that is made of the frame records that have the "average-gap" glazing system thickness and the center-of-glazing defined as the 'average-gap" glazing system defined first.
- Calculate the overall product values from this combination of components.

8.4.2. Storm Window Example

The following example problem, based on the product in Figure 8-23, is explained in detail in the following discussion.

8.4.2.1. Create Glazing System in WINDOW:

1. Make a glazing system consisting of three layers of glass, with the dimensions of the glazing cavity for the first gap, and the correct dimension from the glass to the storm window for the second gap.

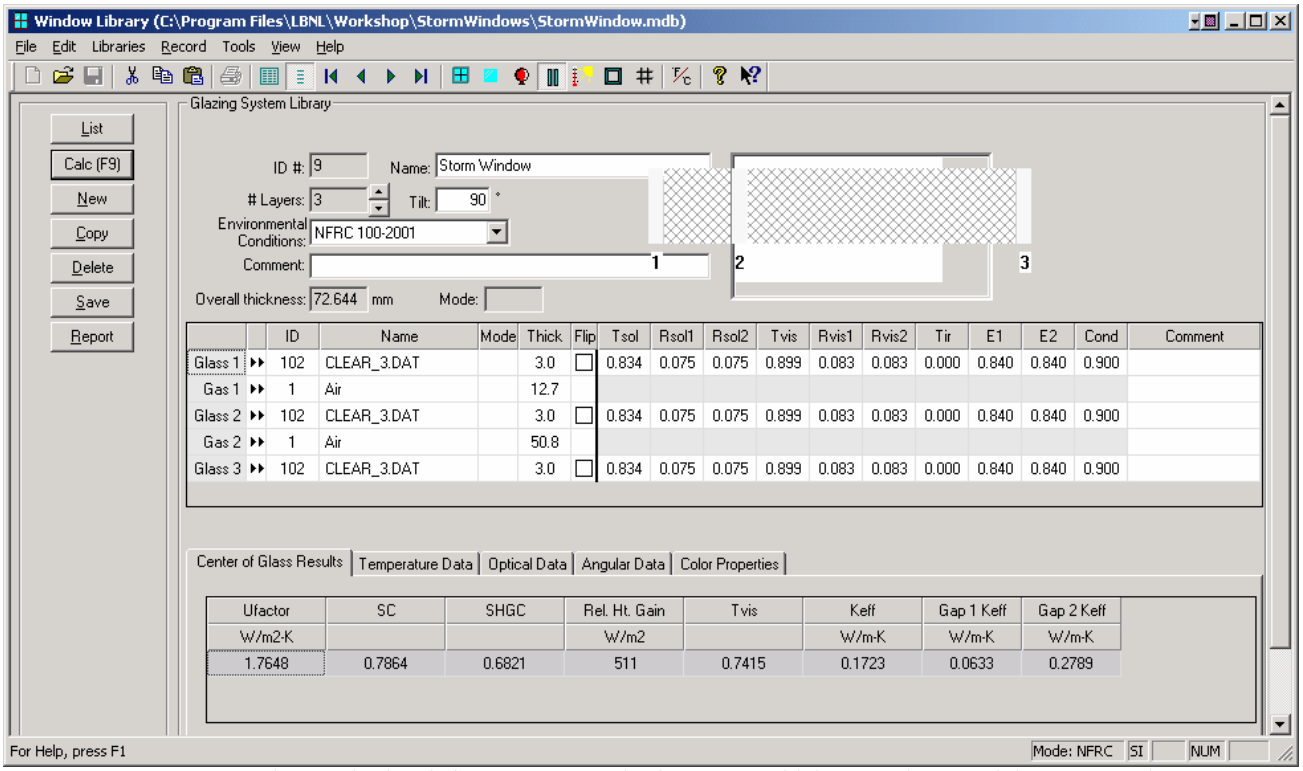

Figure 8-39 Make a triple glazed glazing system with a large gap width between the IG and the storm window.

8.4.2.2. Calculate U-factor in THERM

The steps for importing the glazing system into THERM are explained in more detail below.

1. Draw the required frame cross sections (such as head, sill, jambs, meeting rails, and dividers)
2. From the **File/Properties** menu, select the appropriate **Cross Section Type**, such as "Sill", "Head", "Jamb", and so forth.
3. Import the glazing system with the correct storm window cavity dimensions (created in WINDOW), in this case the glazing system with the 2" gap.
   Edge of Glass Dimension = 63.5 mm (2.5 inch)
   Glazing System Height = 150 mm (6.0 inch).
   Exterior Boundary Condition = **Use existing BC from library**, select "NFRC 100-2001 Exterior"
   Interior Boundary Condition = **Use convection plus enclosure radiation** for glazing system, and appropriate "convection only" boundary condition for the interior frame components.

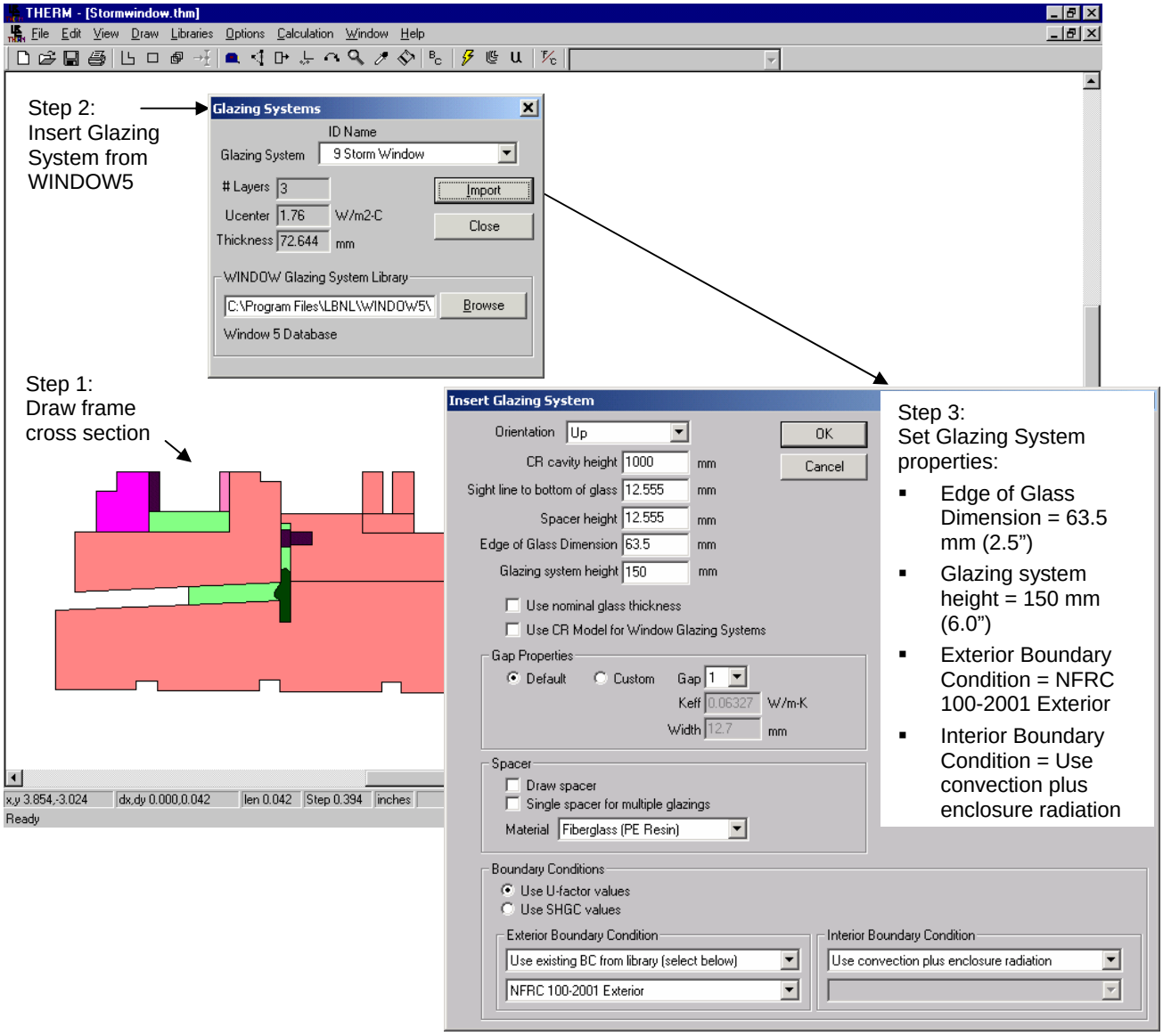

Figure 8-40 Insert the glazing system.

4. If necessary (as in this example because there is a gap between the bottom of the glazing cavity and the frame),use the material linker to create a separate polygon and link the properties to the 2″ glazing cavity.

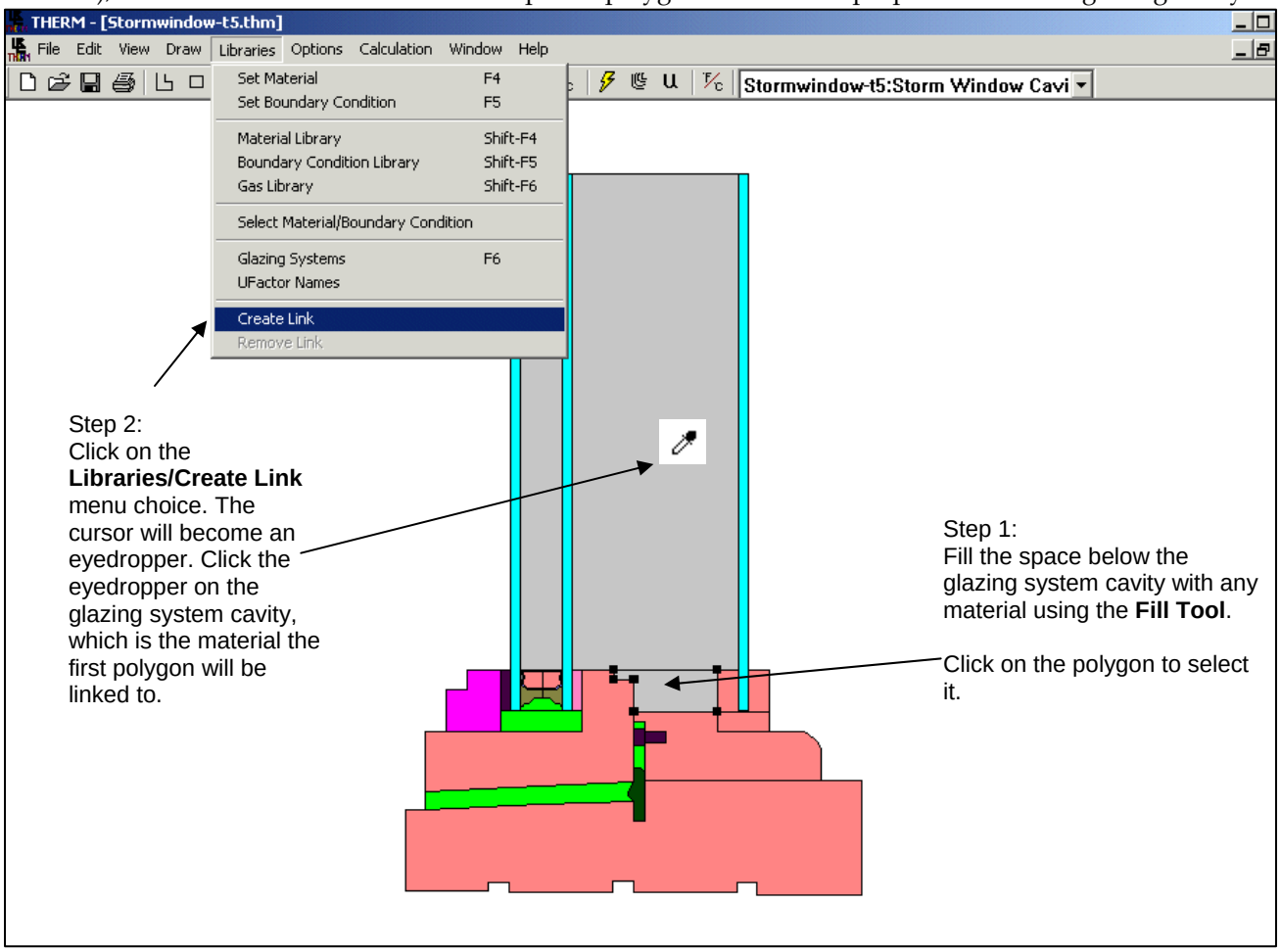

Figure 8-41 If needed, create a material link between the glazing system cavity.

5. Generate the **Boundary Conditions** by pressing the **BC** toolbar button. The figure below shows the boundary conditions for one storm window cross section. Make sure that the interior boundary conditions have the Radiation Model set to "AutoEnclosure".

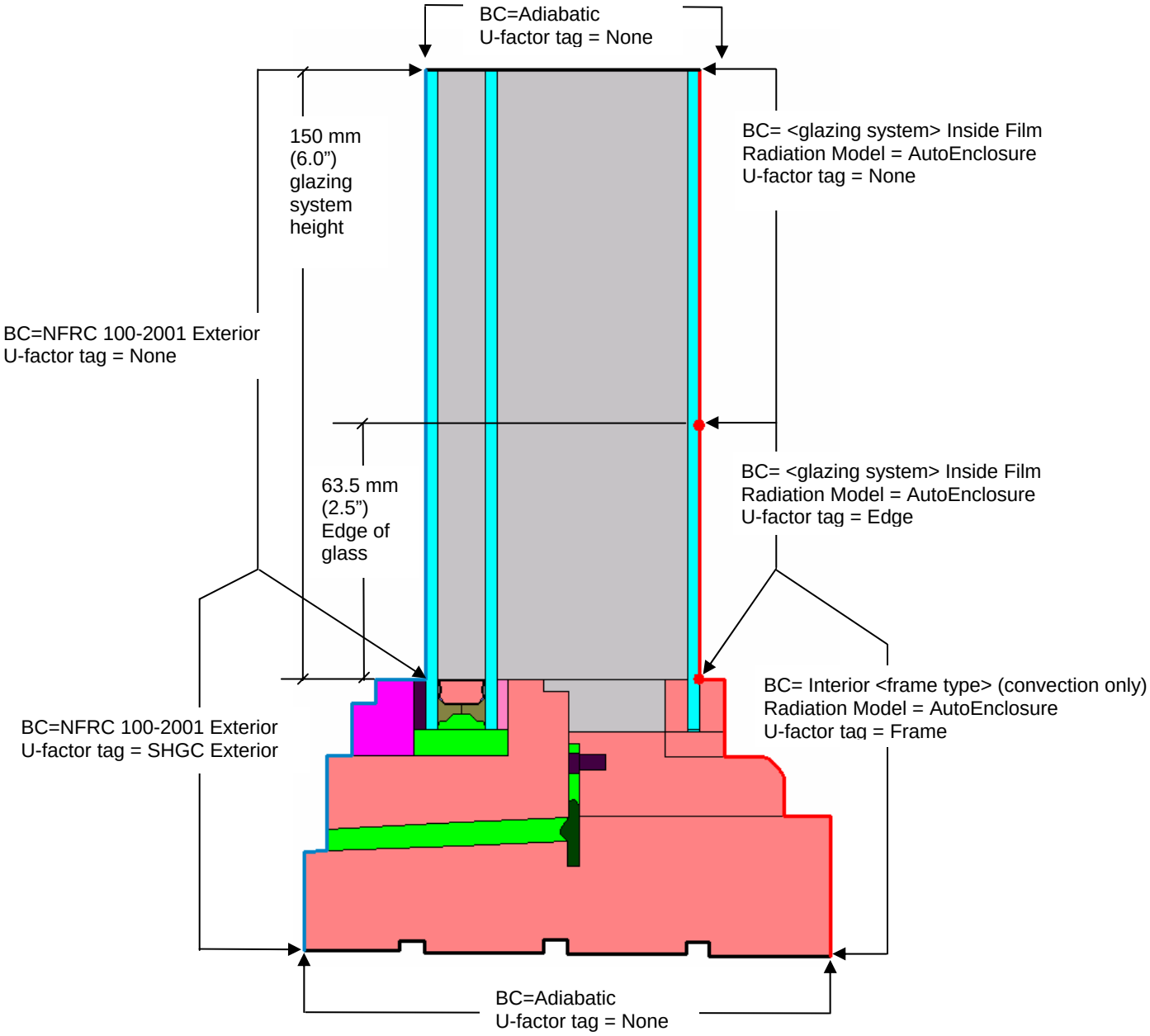

Figure 8-42 Define the boundary conditions.

6. Simulate the problem and save the file.

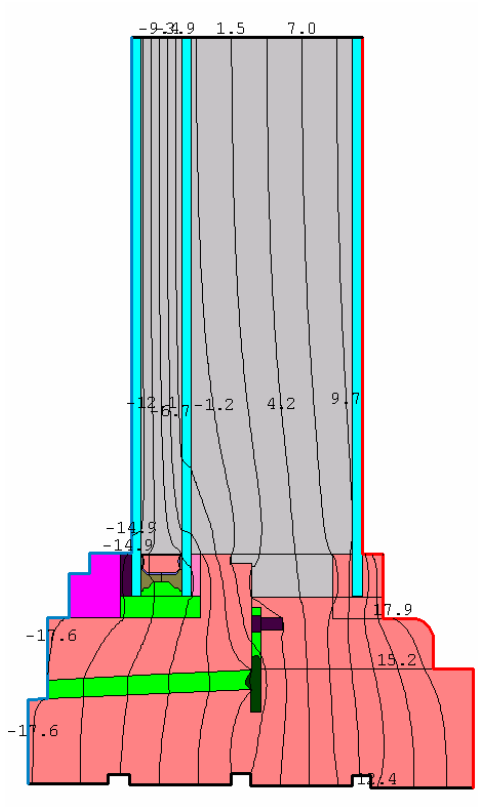

Figure 8-43 Simulate the file.

8.4.3. Steps for Storm Window Condensation Resistance Calculation

The Condensation Resistance model is only appropriate for *horizontal* frame components such as Head and Sill elements – THERM will not calculate the Condensation Resistance for a file with the **Cross Section Type** set to "Jamb" or "Vertical Meeting Rail".

There are two methods for calculating the Condensation Resistance information in THERM, which will be used in WINDOW to calculate the total Condensation Resistance of the product:

- Check the "Use CR Model for Window Glazing System" checkbox when importing a glazing system

  OR

- In the **Options** menu, **Preferences** choice, **THERM File Options** tab, check the "Use CR Model for Glazing Systems", as shown in the figure below.

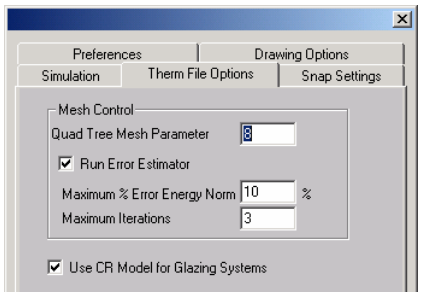

Figure 8-44 In Options/Preferences/Therm File Options, check the "Use CR Model for Glazing Systems" checkbox.

When the CR model has been "turned on", red boundary conditions will appear inside the glazing system, and the following steps should be taken to simulate the file:

1. Check the emissivities of these boundary conditions. They should be the following:
   - Emissivity of the surrounding surface, such as 0.84 for standard glass, 0.90 for painted metal and most other frame materials, 0.20 for mill finish metal, and so forth.
   - 1.0 for the adiabatic (open end) of the glazing cavity.
2. Simulate the model. The program will calculate both U-factor results and the Condensation Resistance results if the CR model is checked.
3. Import the results into the WINDOW **Frame Library** and use the file to create the whole product in the **Window Library** as applicable.

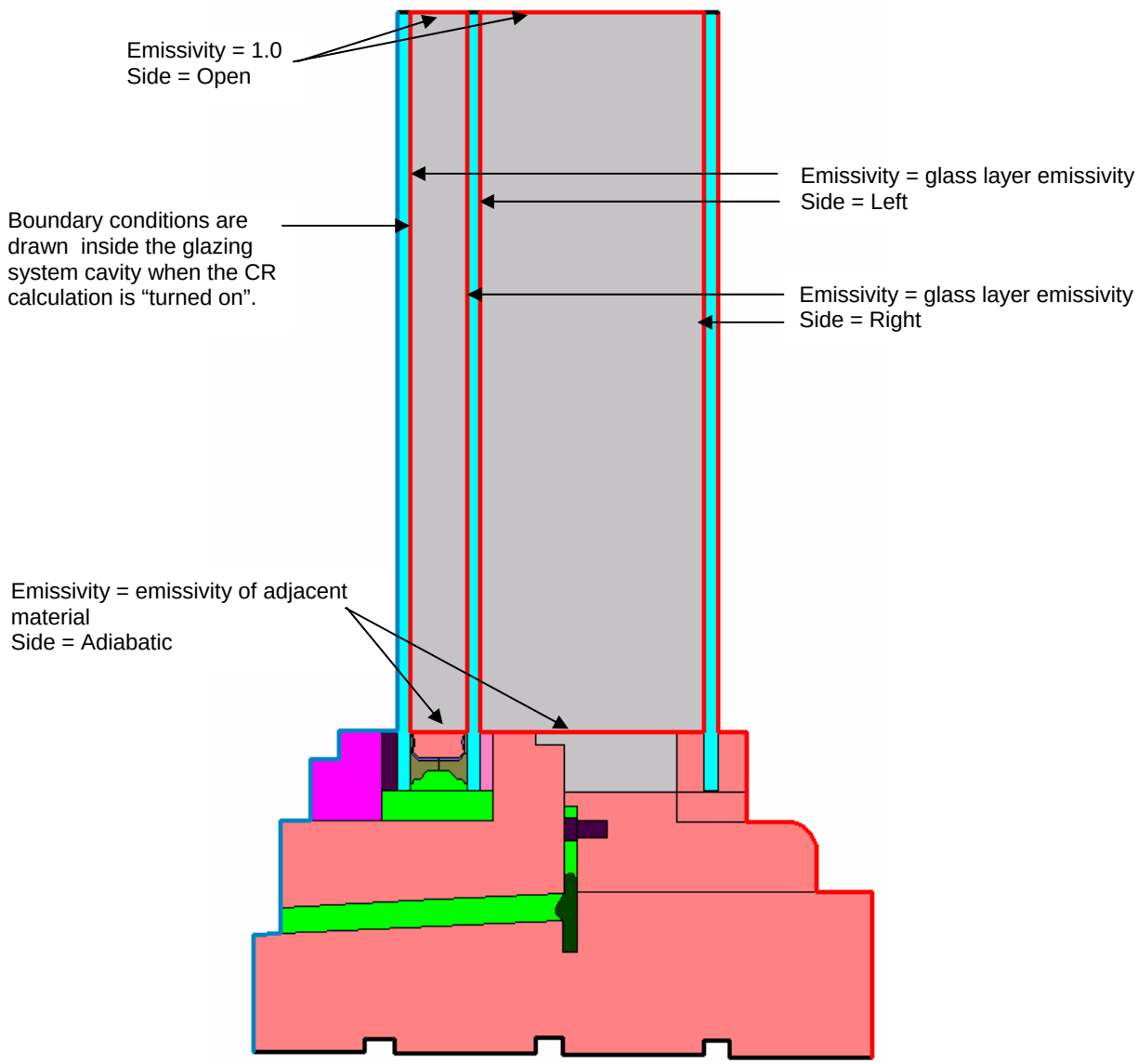

Figure 8-45 Red boundary conditions will appear inside the glazing system when the CondensationResistance option is turned on. Check the emissivities of each boundary condition.

8.4.3.3. Calculate the Total Product Values in WINDOW

The following discussion explains how to model the whole product values for the storm window in WINDOW.

- Import the THERM files into the WINDOW **Frame Library**.

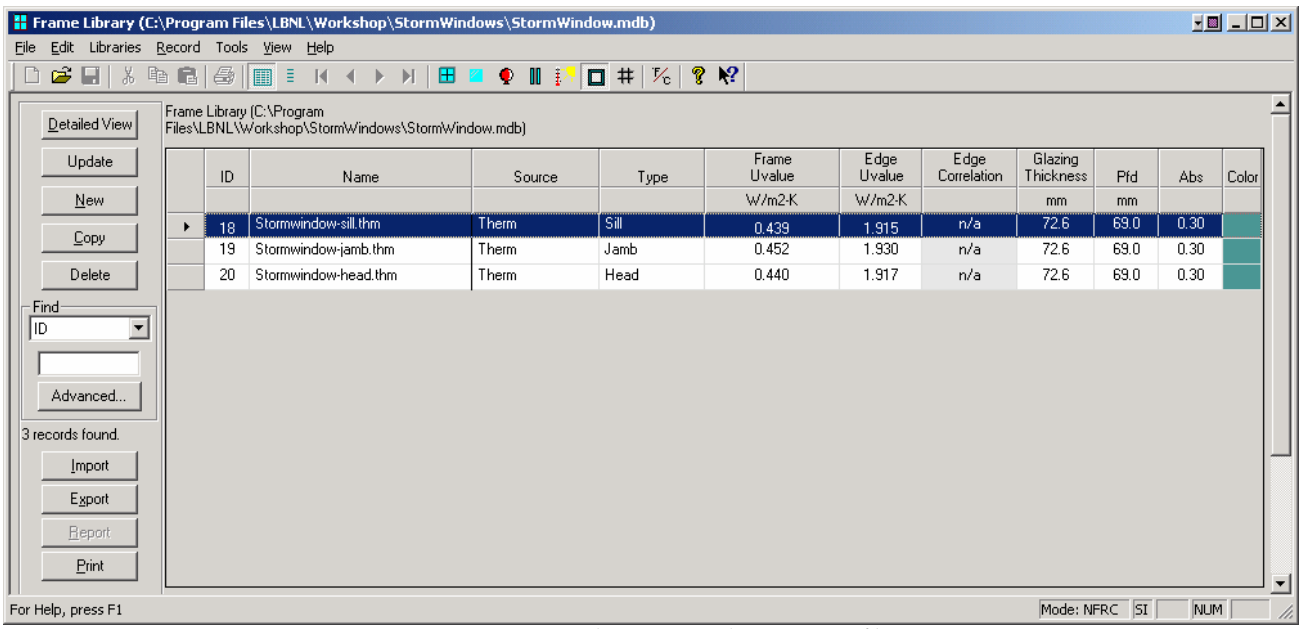

Figure 8-46 Import the storm window THERM files .

- In the WINDOW **Window Library**, construct the storm window from the THERM files and the glazing system previously defined, and calculate the total product values.

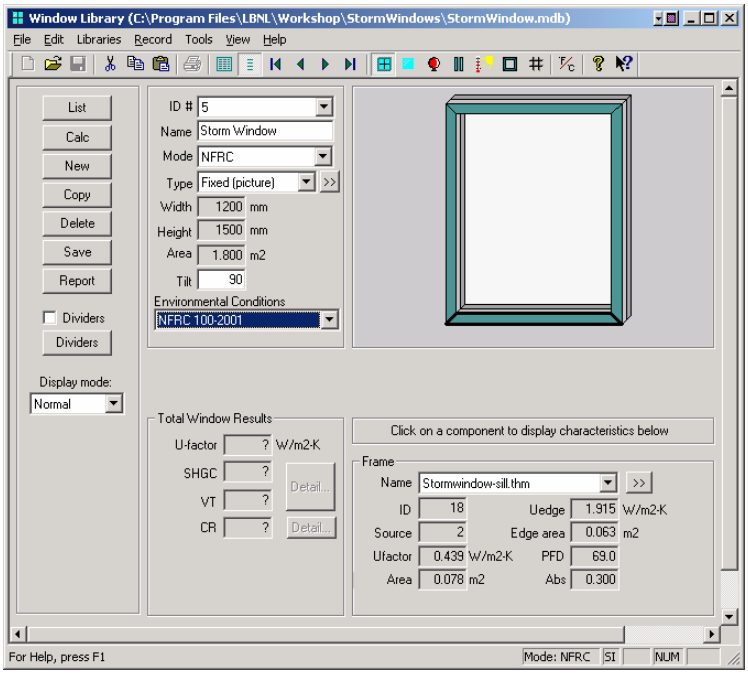

Figure 8-47 Storm window created in the Window Library to obtain total product results.

8.5 Skylights

This section discusses the modeling procedures for skylights, which are modeled in sections in a similar manner to other products. In addition, in accordance with *NFRC 100*, skylights are modeled at a 20° slope from horizontal.

8.5.1. Skylight Modeling Steps

The steps for modeling a skylight are as follows:

In WINDOW:

- Create the skylight glazing system in WINDOW:
  - Set **Tilt** to "20" degrees

In THERM:

- Draw the required frame cross sections in THERM, for example a head, sill, and jambs if they are all different, untilted. Because the tilt of the jambs will be in the z-direction, which is not possible to display in the two dimensional viewing of THERM, they will be drawn vertically and the gravity vector oriented properly to reflect the tilt in the z-direction.
- Do not use the Condensation Resistance Model on any of the THERM skylight cross sections. WINDOW will calculate the CR value based on the temperatures from the U-factor results. (Even if the THERM cross sections are modeled with CR enabled, WINDOW will use the U-factor temperature results rather than the CR temperature results when calculating the whole product CR value).
- Set the **Cross Section** value in **File/Properties** as follows:
  - For **Sill**: set **Cross Section** to "Sill", **Gravity Vector** should face "Down"
  - For **Head:** set **Cross Section** to "Head", **Gravity Vector** should face "Down"
  - For **Jambs:** set **Cross Section** to "Sill", set **Gravity Vector** to "Right"
- The Frame Cavity height is not used by the program for the skylight cross sections, as long as the Types are defined properly as shown above, so the default value of 1000 mm can be left unchanged.
- Insert the glazing system from WINDOW into the frame cross sections with the **Edge of Glass Dimension** field set to 150 mm (6.0 inches). The**CR cavity height** field can be set to any value (you can leave it set to the default of1000 mm) because the U-factor temperatures not the CR temperatures will be used in WINDOW to calculate the overall CR value).
  - Insert the **Sill** glazing system with orientation up
  - Insert the **Head** glazing system with orientation down
  - Insert the **Jamb** glazing system with orientation up
- Assign the boundary conditions. Interior Boundary conditions have the following settings:
  - **Radiation Model** set to "AutoEnclosure"
  - **Frame Boundary Conditions:** set to the appropriate "Interior (20 tilt) …" choices
- Tilt the cross section 20 degrees from horizontal:
  - For a **Sill** or **Head**, rotate the entire model 70 degrees clockwise
  - For **Jambs**, do not rotate the model at all

- Simulate the skylight cross sections and save them.
- View the U-factor for the cross section, and make sure the "Projected in Glass Plane" is selected from the Projection pulldown list, as shown in the figure below. This will ensure that the projection will be correct for the tilted cross section.

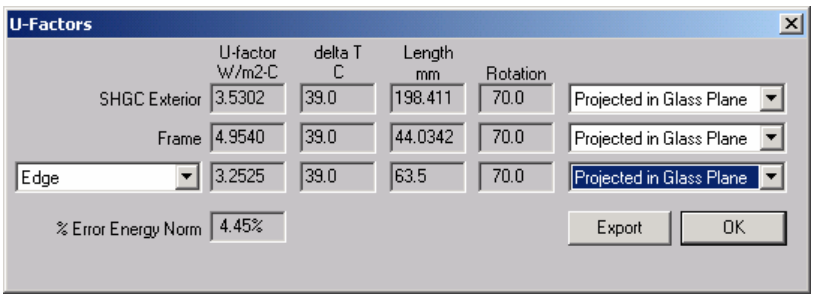

Figure 8-48 Make sure the "Projected in Glass Plane" projection option is selected for the tilted cross section.

There is a circumstance where THERM will not calculate the total frame length correctly, and it is necessary to enter a "Custom Frame Length" into the U-factor dialog box above. It occurs when a section of an adiabatic boundary "overlaps" a boundary with a U-factor tag in the projected dimension over which the length is being calculated. This is explained in detail in Chapter 6, Section 6.6.6.

- Import the components into the WINDOW Frame Library (and Divider Library if appropriate)
- Construct the whole product in the WINDOW Window Library to get the overall product results.

8.5.2. Skylight Mounting Details

There are two ways that skylights can be mounted into a roof system, either flush-mounted (also called inset-mounted) or curb-mounted. Figure 8-33 and 8-34 show these two different mounting styles. Each mounting style has a slightly different definition of the adiabatic boundary condition, and each will have a different projected frame length. The rules for modeling can be found in *NFRC 100* and the NFRC Technical Interpretations. To model curb mounted skylights, if the projected frame height is zero, define a Frame U-factor Surface Tag 0.25 mm (0.01 inches) up the interior of the glass, which will result in a non-zero frame height.

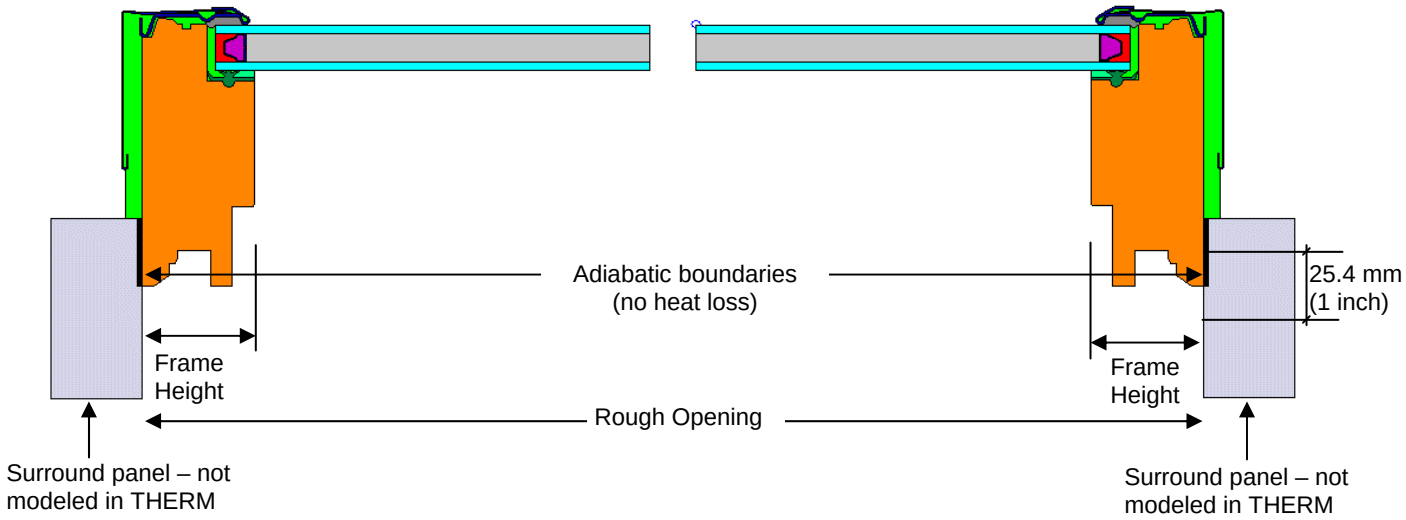

Figure 8-49 A flush-mounted (or inset-mounted) skylight.

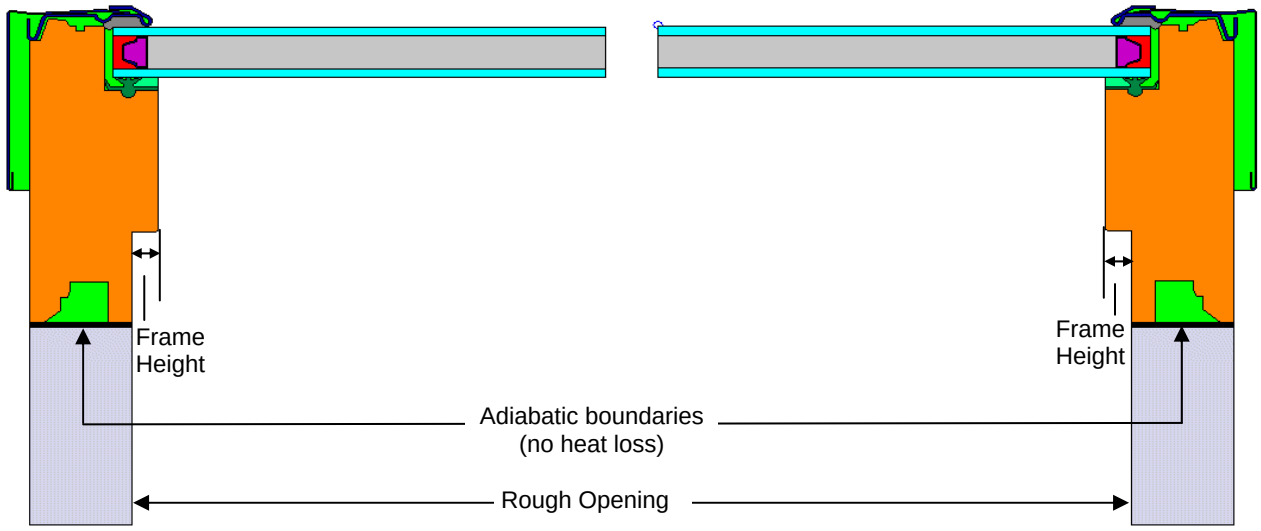

Figure 8-50 A curb-mounted skylight.

8.5.3. Example Flush Mounted Skylight Problem

This example assumes a flush-mounted skylight.

In WINDOW:

1. **Glazing System Library:** Make a glazing system with a tilt of 20° off horizontal. In this example, the glazing system is called **Skylight Double Glz** and is made up of generic glass layers.

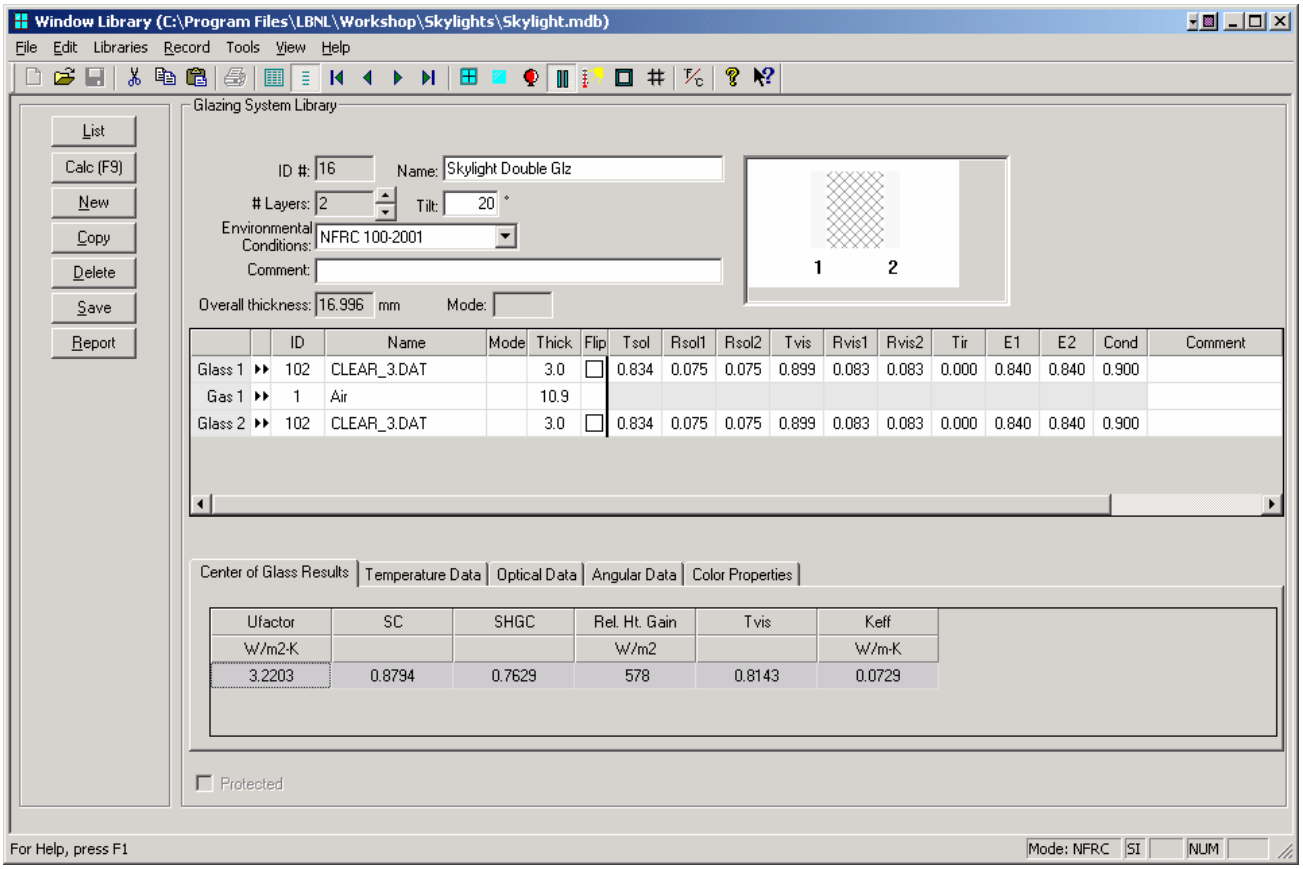

*Figure 8-51 Make new glazing system in the **Glazing System Library** with **Tilt** = 20 degrees.*

2. **Save the file:** Make sure to save the glazing system (**Record** menu**, Save** choice**.**).

In THERM, for Sill:

1. Draw the appropriate cross sections for the Sill.

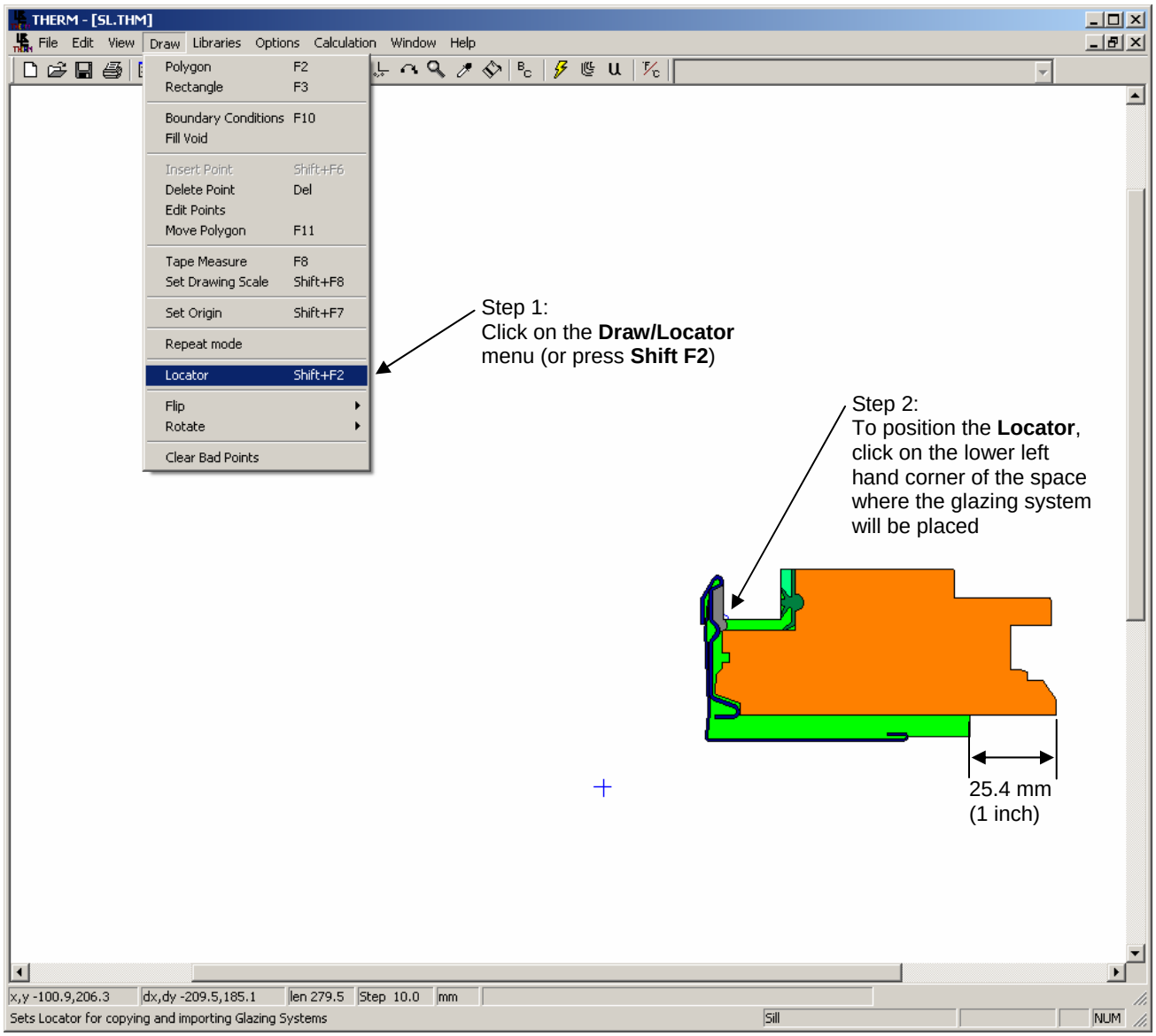

Figure 8-52 Position the locator so that the first glazing section can be inserted.

2. Insert the glazing system for the Sill, with the following settings:
   - **Orientation** = Up
   - **Cavity height** = 1000 mm
   - **Sight line to bottom of glass** = measure this value with the tape measure or get from dimensioned drawings
   - **Spacer height** = measure this value with the tape measure or get from dimensioned drawings
   - **Edge of Glass Dimension** = 150 mm (6.0 inches)
   - **Draw spacer** = not checked

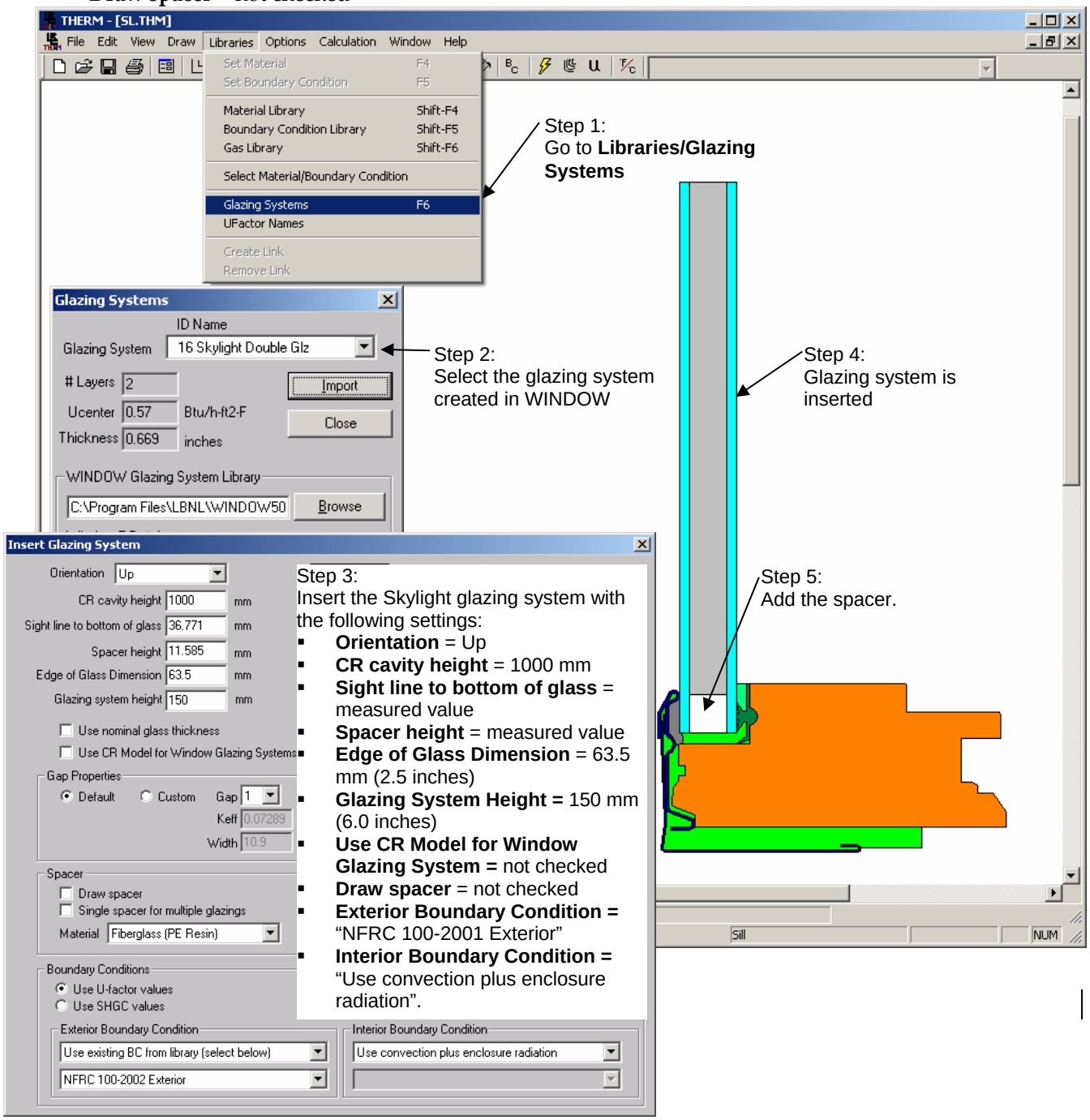

Figure 8-53 Insert the glazing system .

- Note: If using the Multiple Glazing Options feature of THERM, set up the multiple glazing options before tilting the profile, so that all the Boundary Conditions become defined automatically for the glazing options by THERM. Then tilt the cross-section.

3. **Assign Boundary Conditions and U-factor tags:** Click on the Boundary Conditions (BC) toolbar button and correct any problems encountered with the geometry (see Section 6.5.3, "Voids, Overlaps, and Bad Points" in this manual).

4. Tilt the cross section to be 20 degrees off the horizontal plane. For this example sill cross section, click on the **Draw** menu, **Rotate/Degree** choice, and enter **70** degrees **Clockwise**.

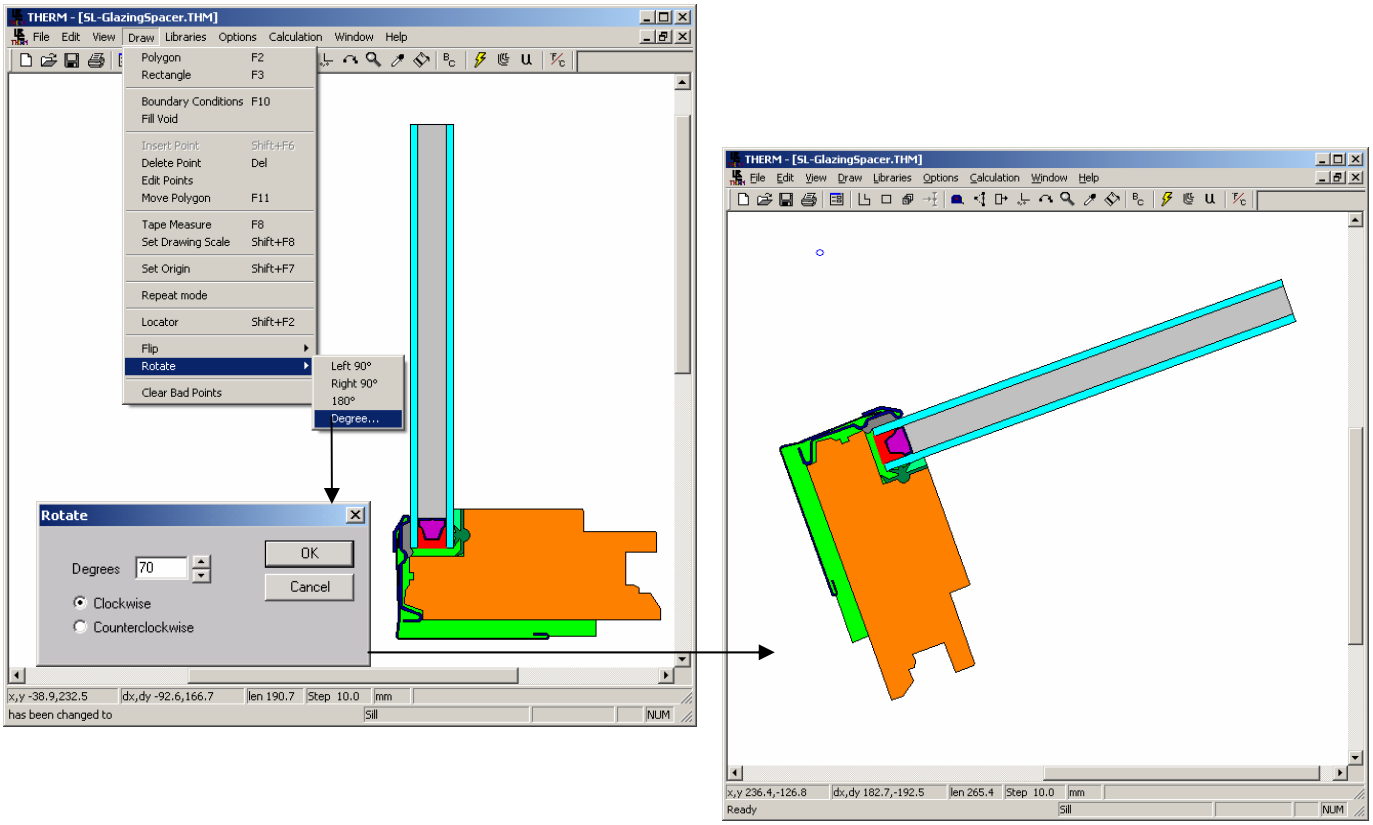

Figure 8-54 Rotate the sill cross section AFTER assigning Boundary Conditions.

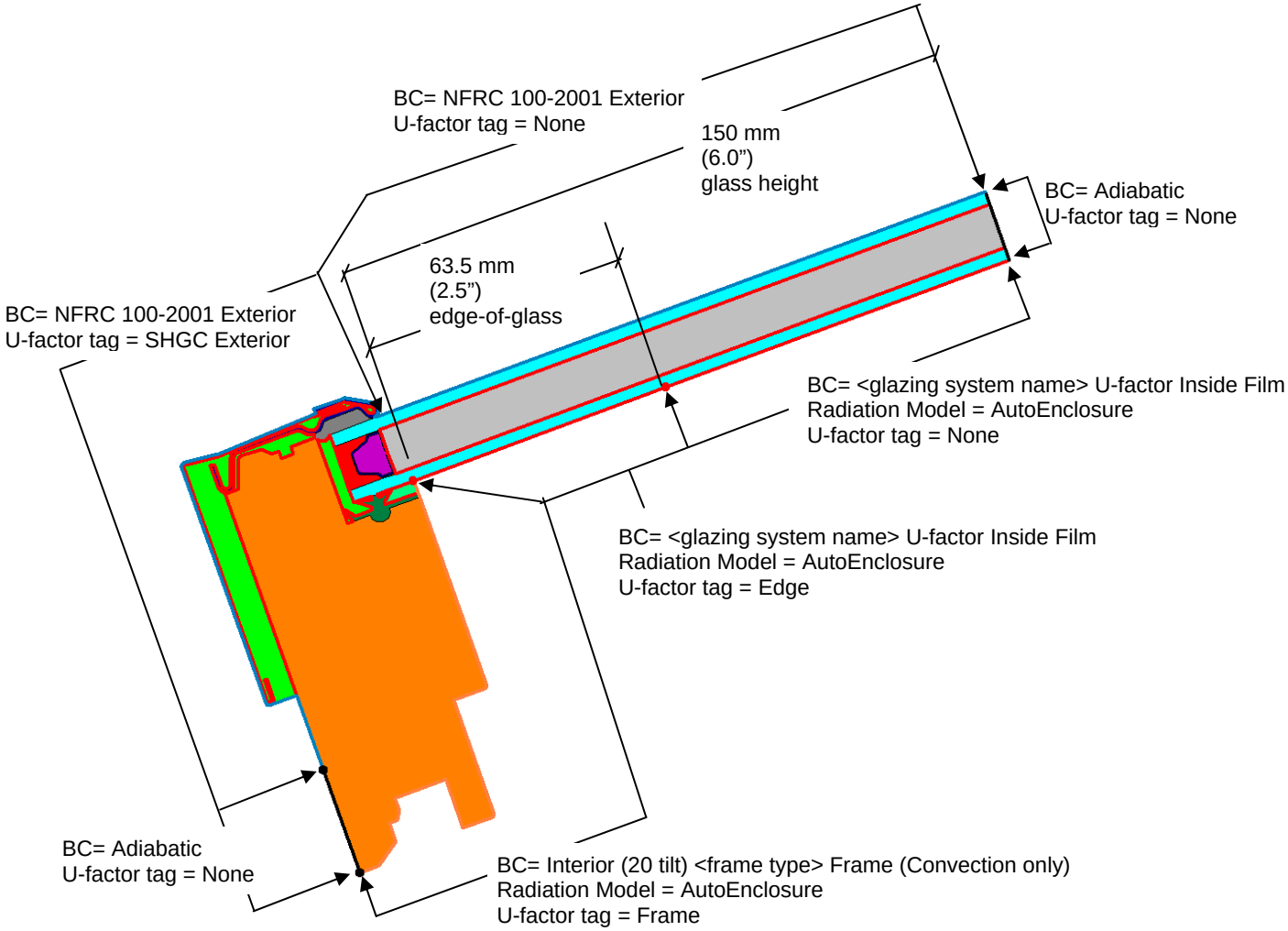

Figure 8-55 Boundary condition and U-factor tag settings for skylight Sill example.

6. Check the **Gravity Vector** for the Sill cross section (**View/Gravity Arrow**), which should point down.

7. Simulate the file.

8. Click on the Show U-factors button to view the U-factors dialog box. Make sure that the projection is set to "Projected in Glass Plane" which will allow the program to calculate the correct projected frame dimensions with a tilted cross section.

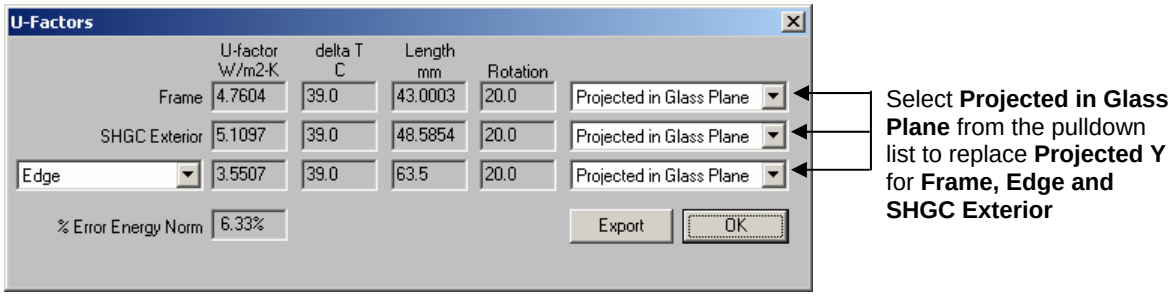

Figure 8-56 Select the Projected in Glass Plane for the projected frame dimension calculation.

In THERM, for Head:

1. Create the cross section for the Head, set the **Cross Section Type** to "Head", and import the glazing system facing **Down** (in order to get the Gravity Vector pointing in the proper direction).
2. Assign the Boundary Conditions as shown in the figure below.
3. Tilt the Head cross section so that it is 20 degrees off horizontal (click on the **Draw** menu, **Rotate/Degree** choice, and enter **70** degrees **Clockwise)**.
4. Check the Gravity Vector (**View/Gravity Arrow**), which should be pointed down.

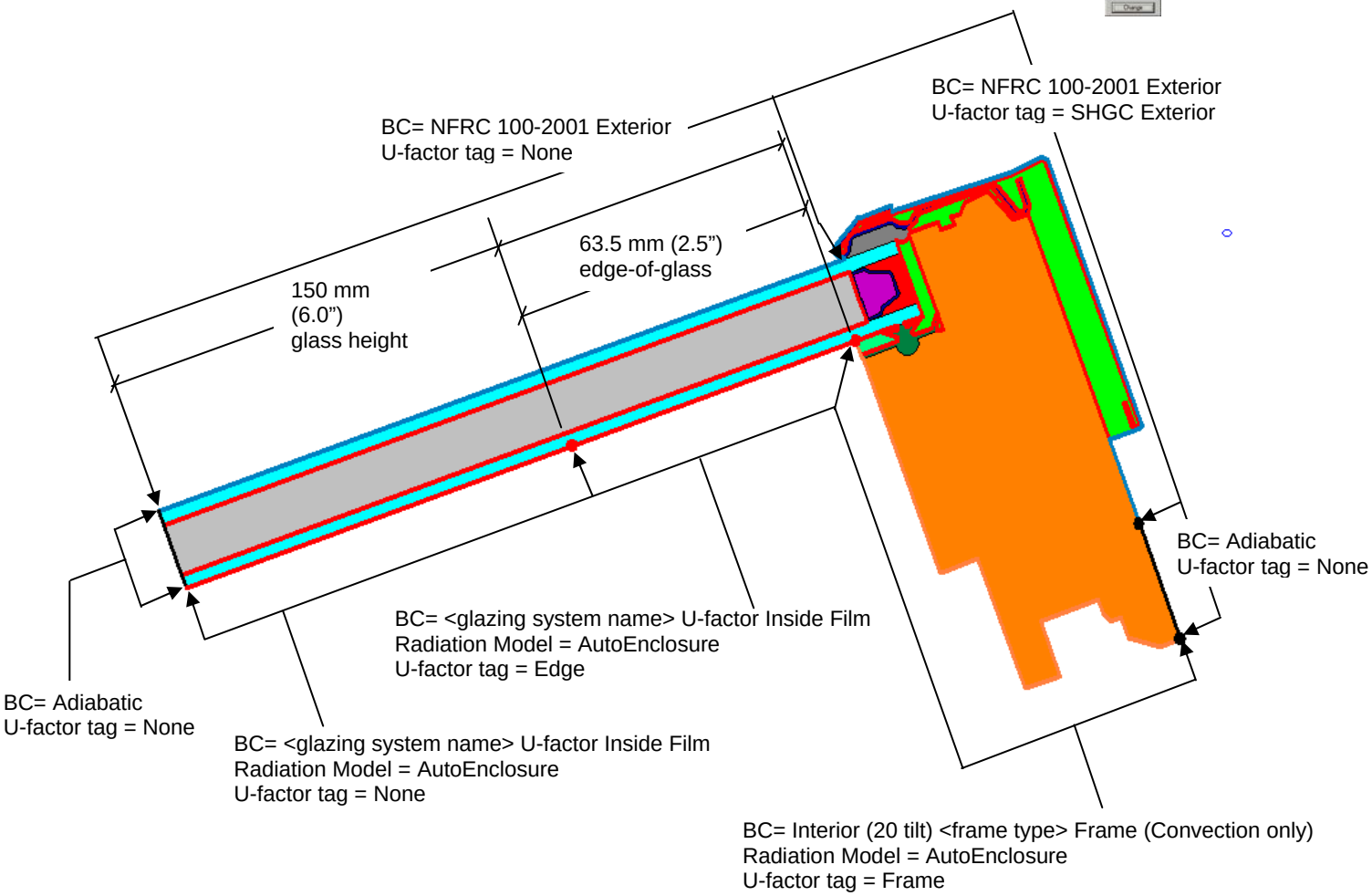

Figure 8-57 Boundary condition and U-factor tag settings for skylight Head example.

5. Simulate the file.

6. Click on the Show U-factors button to view the U-factors dialog box. Make sure that the projection is set to "Projected in Glass Plane" which will allow the program to calculate the correct projected frame dimensions with a tilted cross section.

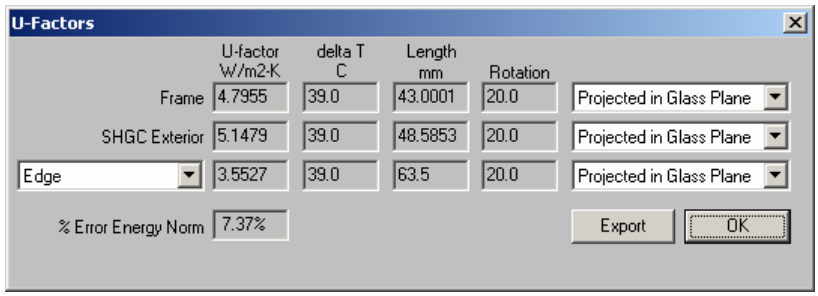

Figure 8-58 Select the Projected in Glass Plane for the projected frame dimension calculation.

In THERM, for Jamb:

1. Create the cross-section for the Jamb. The steps are similar to modeling the head and sill, except for the following:
   - Jambs are modeled in the vertical direction
   - The Cross Section Type is set to "Sill"
   - The glazing system is oriented "Up"
   - The gravity vector is set by hand to "Right"

2. Simulate the file.
   Because the cross section is not rotated, the projection in the U-factor dialog box can be set to either "Projected Y" or "Projected in Glass Plane"; both settings will result in the same answer.

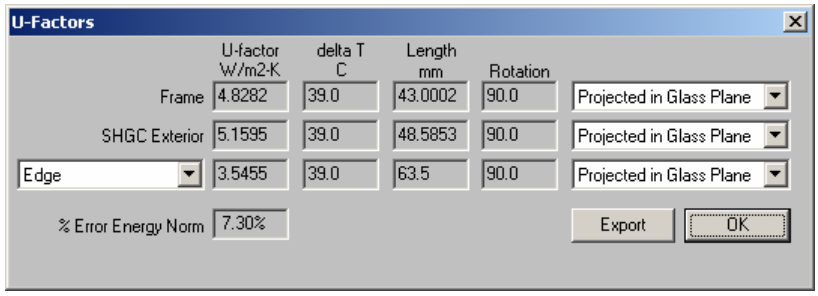

Figure 8-59 The projection can be set to either "Projected Y" or "Projected in Glass Plane"; both will result in the same answer.

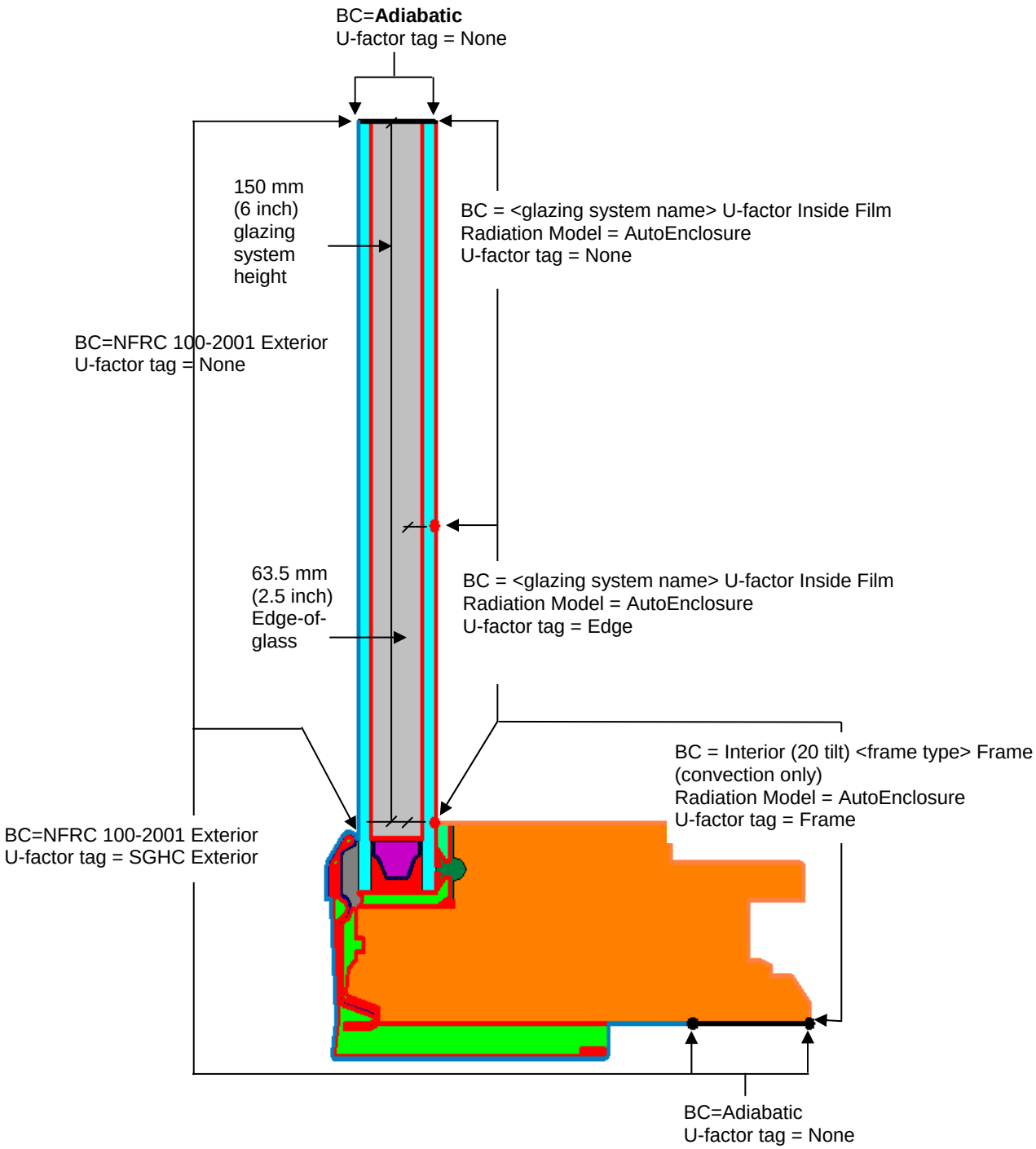

Figure 8-60 Boundary condition and U-factor tag settings for skylight jamb example.

In WINDOW, Calculate the Total Product U-factor:

1. In the WINDOW **Frame Library**, import the THERM files for the Head, Sill, Jamb and any other needed cross sections that were modeled.

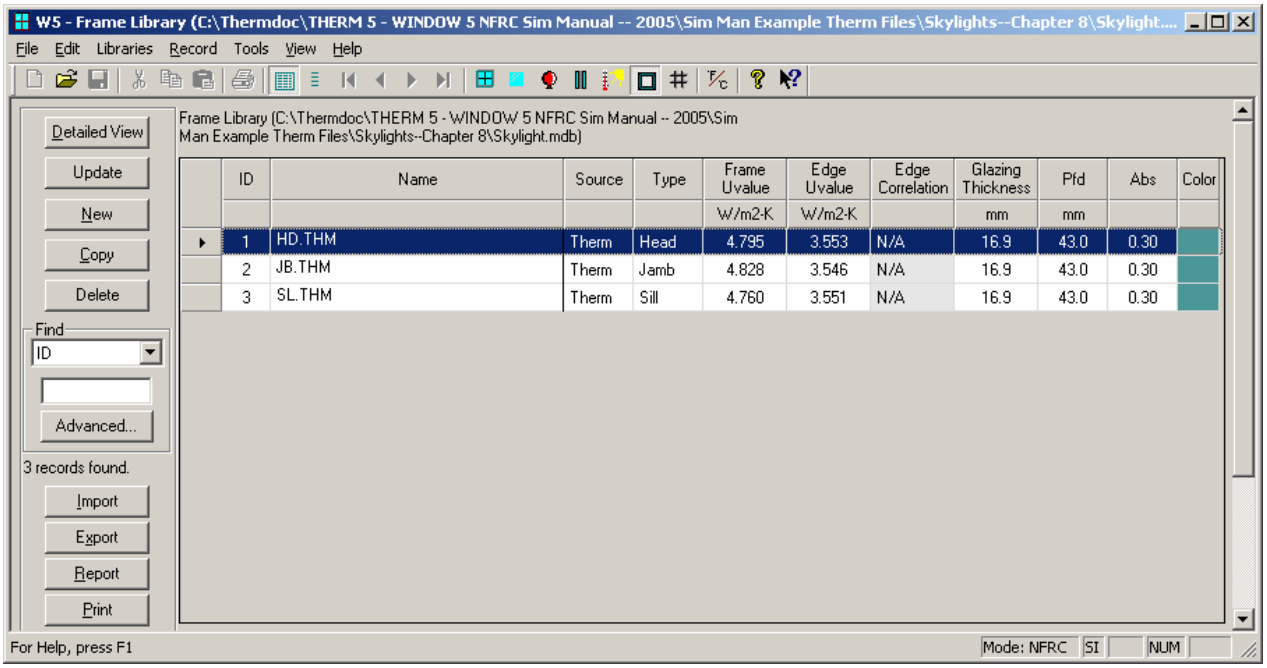

Figure 8-61 Import the skylight THERM files into the WINDOW Frame Library.

2. Construct the whole skylight in the WINDOW **Window Library** by using the THERM files for the frame components and the glazing system for the center of glass. Make sure that Type = Skylight and Tilt = 20.

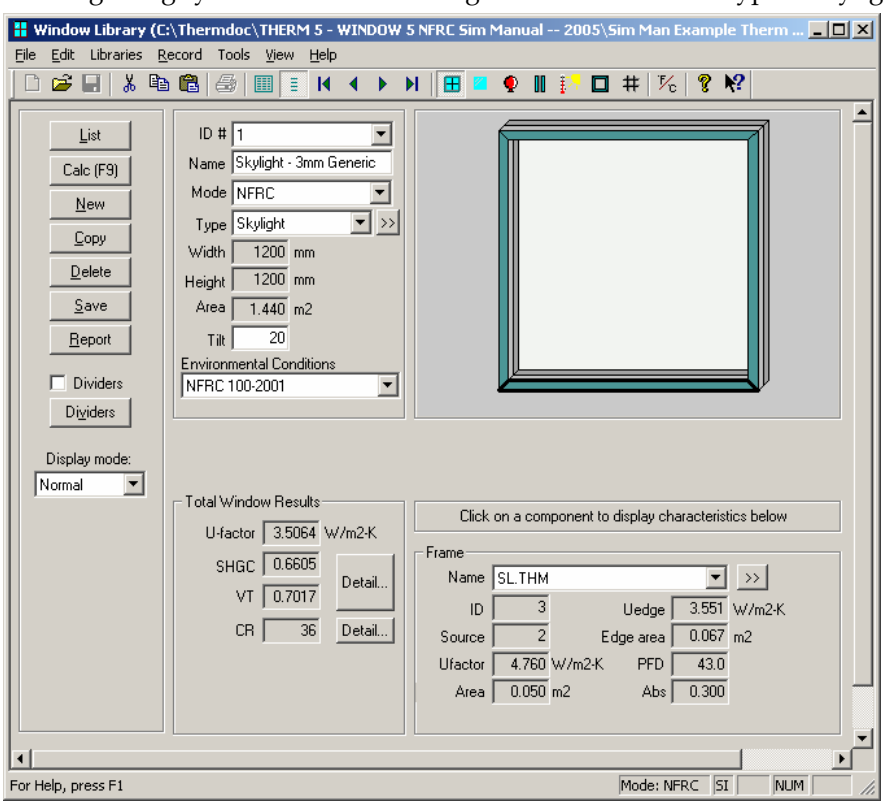

Figure 8-62. Create the whole skylight in the Window Library.

8.6 Tubular Daylighting Devices

Tubular skylights are a group of products that can loosely be defined as non-standard skylight products. Their primary purpose is to provide daylighting, and not view to the outside. For this reason, there are some arguments whether these products can be considered fenestration at all. However, because they penetrate the building envelope and provide some of the essential functionality of a fenestration system (i.e., daylight) they are considered to be a fenestration product.

The assumptions and methodology for modeling these products differs considerably from typical fenestration products. The following is a list of standardized assumptions to be used when modeling tubular daylighting devices:

- D = Shaft Diameter = 350 mm (14 in.)
- L = Shaft Length = 750 mm (30 in.)
- Standard dome mounted on 350 mm (14 in.) shaft
- Exterior boundary conditions are applied on the exterior side of the dome
- Standard ASHRAE Attic boundary conditions are applied to the exposed surfaces of the shaft,
- Bottom of the shaft is mounted in a 250 mm (10 in.) thick surround panel (standard surround panel material, such as EPS),
- Bottom of tubular skylight is covered with light diffusing plate (manufacturer supplied).

The first step is to draw the geometry of the tubular daylighting device in THERM, per the manufacturers' drawings and using the assumptions above (see Figure 8-46). Material properties, other than frame cavities, should be assigned from the THERM material library.

Next calculate the effective conductivity of the shaft and dome cavity. The set of equations and assumptions required to calculate effective conductivity of this cavity is detailed in Curcija (2001). A custom spreadsheet is also designed to facilitate this calculation and is available on request from NFRC (tubes_keff.xls). The information necessary to calculate k_{eff} of this cavity are the average temperatures and emissivities of the inside surface of the diffuser plate at the bottom of the cavity, and inside surface of the dome at the top of the cavity. Initially these temperatures need to be estimated, a reasonable starting point being -2°C (28.4 °F) for the diffuser plate and –17°C (1.4 °F) for the dome (when the dome is single glazed). After the THERM simulation is calculated with the keff determined from these estimated temperatures, find the average temperatures for the diffuser plate and dome surfaces using the THERM tape measure tool. If the resulting average temperatures differ by more than 1° C (2 °F) from the estimated values, a new keff shall be calculated and the THERM simulation repeated with the new keff. This process should be repeated until the criterion of 1° C (2 °F) temperature difference is satisfied. In many cases, one iteration is enough, but the temperatures shall be checked to make sure that this has been met for the particular case. In the THERM file, fill the shaft/dome cavity with a solid material which has the conductivity equal to the calculated k_{eff}. Fill the other small frame cavities with the "Frame Cavity NFRC 100-2001" frame cavity material, which will automatically calculate effective conductivity of them.

Next the boundary conditions need to be defined and assigned as shown in Figure 8-47. The exterior and adiabatic boundary conditions can be used from the THERM library, while the attic and indoor side of the diffuser plate must be defined in the THERM Boundary Condition Library. The following values should be used for the boundary conditions:

- Exterior: **NFRC 100-2001 Exterior**
  h_o = 30 W/m² ·K; T_o = -18 °C
  (h_o = 5.3 Btu/hr ·ft² ·°F; T_o = 0 °F)
- Adiabatic**: Adiabatic**
  q = 0 W/m²
  (q = 0 Btu/hr ·ft²)
- Attic: **User defined**
  h_a = 12.5 W/m² ·K; T_a = -18 °C
  (h_a = 2.2 Btu/hr ·ft² ·°F; T_a = 0 °F)
- Indoor Side of diffuser plate: **User defined**
  h_i = 9 W/m² ·K; T_i = 21 °C (1.582 Btu/hr ·ft² ·°F; T_i = 70 °F)

Note: The height of the shaft/dome cavity represents area weighted equivalent height, L_{eqv}, and is set to 1.041 m (41 in.) for domed top diffuser products and 750 mm (30 in.) for flat top diffuser products.

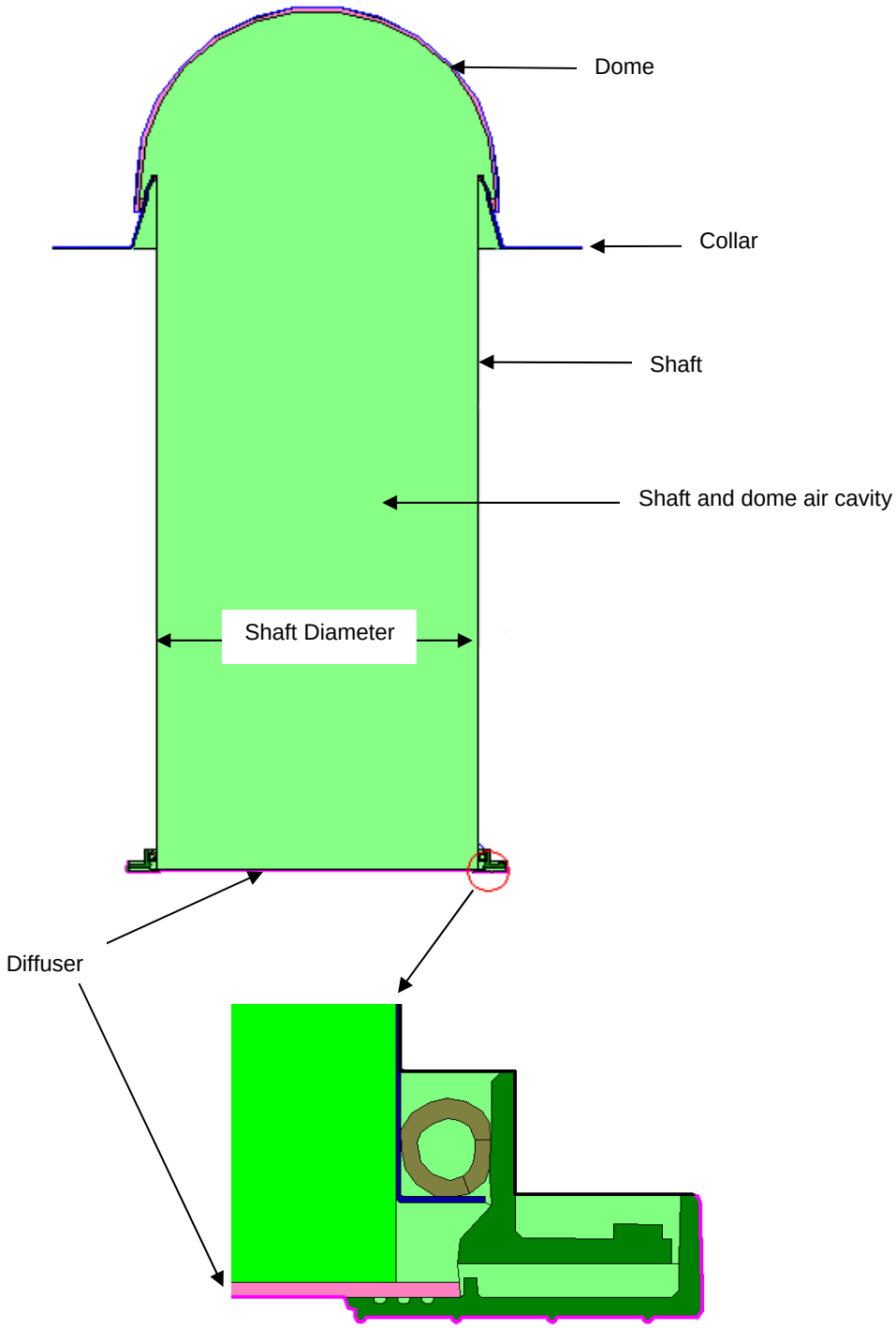

Figure 8-63 Tubular Daylighting Device Geometry drawn in THERM.

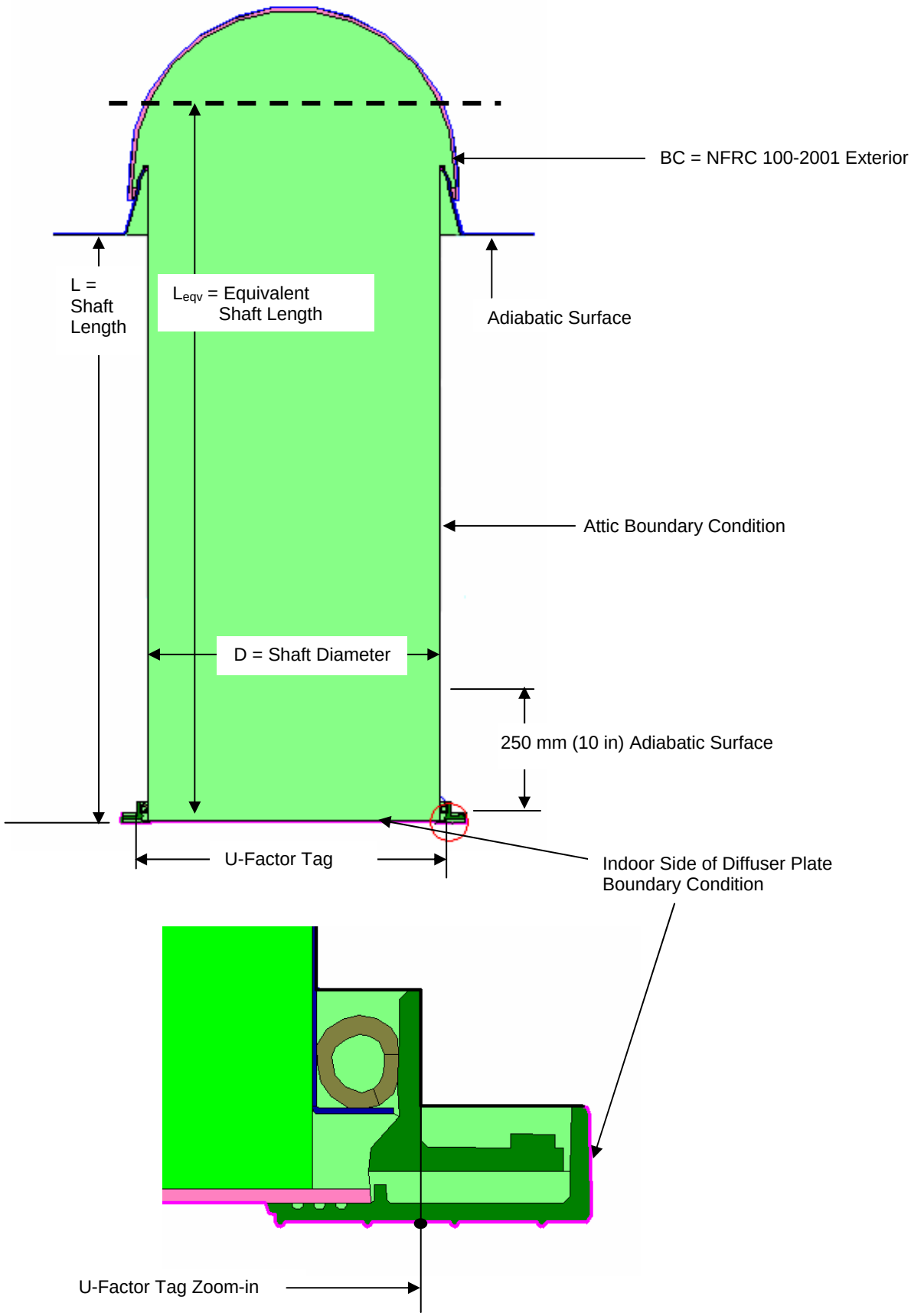

Figure 8-64 Boundary Conditions and location of U-factor tag for Tubular Daylighting Device.

The last step before simulating the problem is to define the U-factor tag. This tag is defined as shown in Figure 8-50. After the calculation is done, the U-factor obtained represents the total product performance.

8.6.4. Example Tubular Devices Problem

This example assumes that the bottom diffuser plate is made up of a single layer. For multiple layer plates, additional instructions are given at the end of this example. For single layer plates, it is not necessary to do calculations with WINDOW.

Begin by drawing geometry in THERM either by using DXF file underlay as shown below or by using a dimensioned drawing.

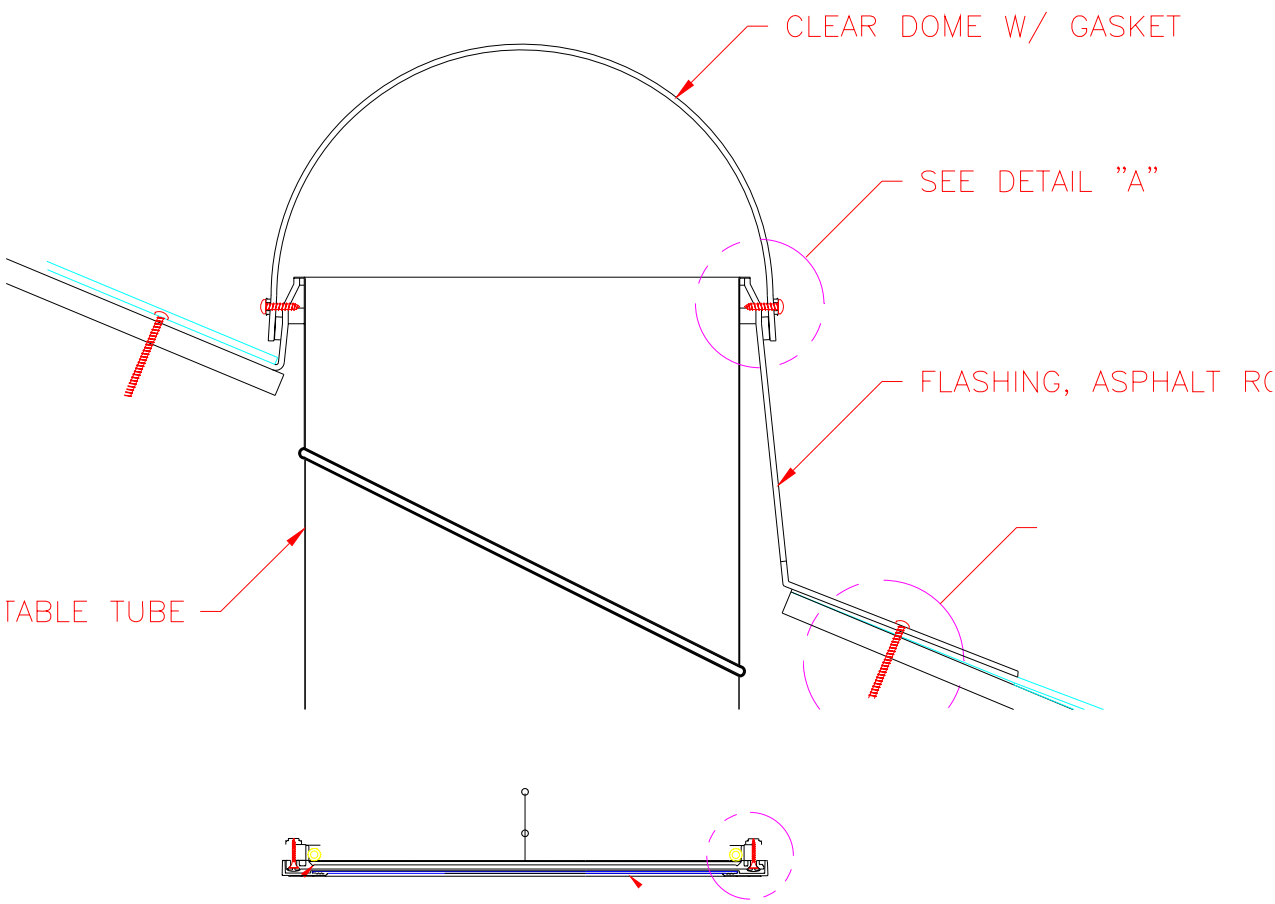

Figure 8-65 DXF File for Use as an Underlay in THERM.

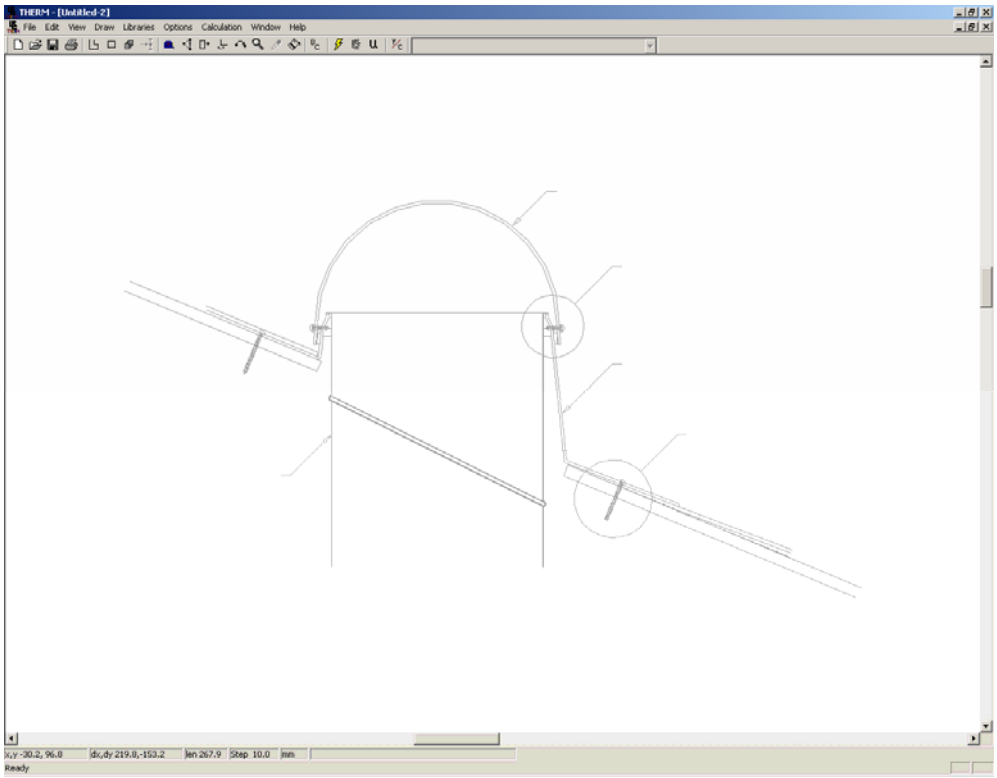

Figure 8-66 Underlay of the Top Part of the Tubular Daylighting Device.

Draw the geometry of all solid pieces of the tubular skylight, making sure that the shaft is 350 mm (14 in.) wide. The width of the dome should be adjusted to fit over such a shaft but thickness of the dome material shall not be changed. Include all of the details of sealing as per the manufacturers' drawings and specifications. The figure below shows the completed dome, collar, and one side of the shaft wall, along with gaskets.

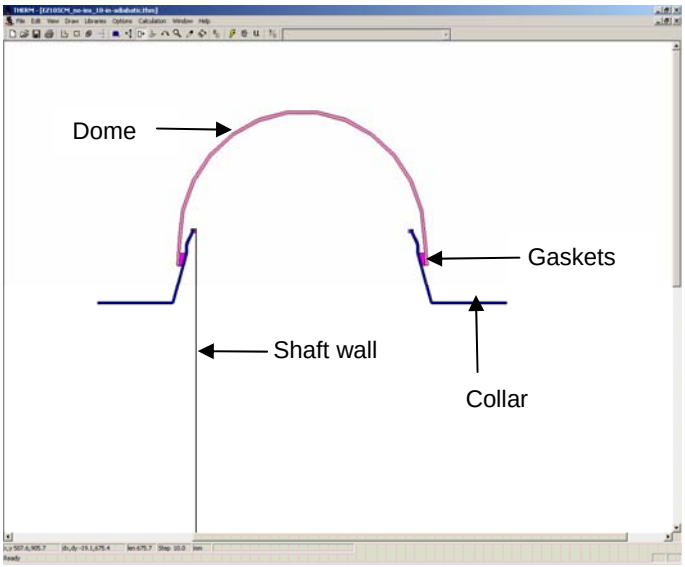

Figure 8-67 THERM drawing of the dome, collar, gaskets and one section of the shaft wall.

The figure below shows the completed solid sections without any frame cavity polygons defined.

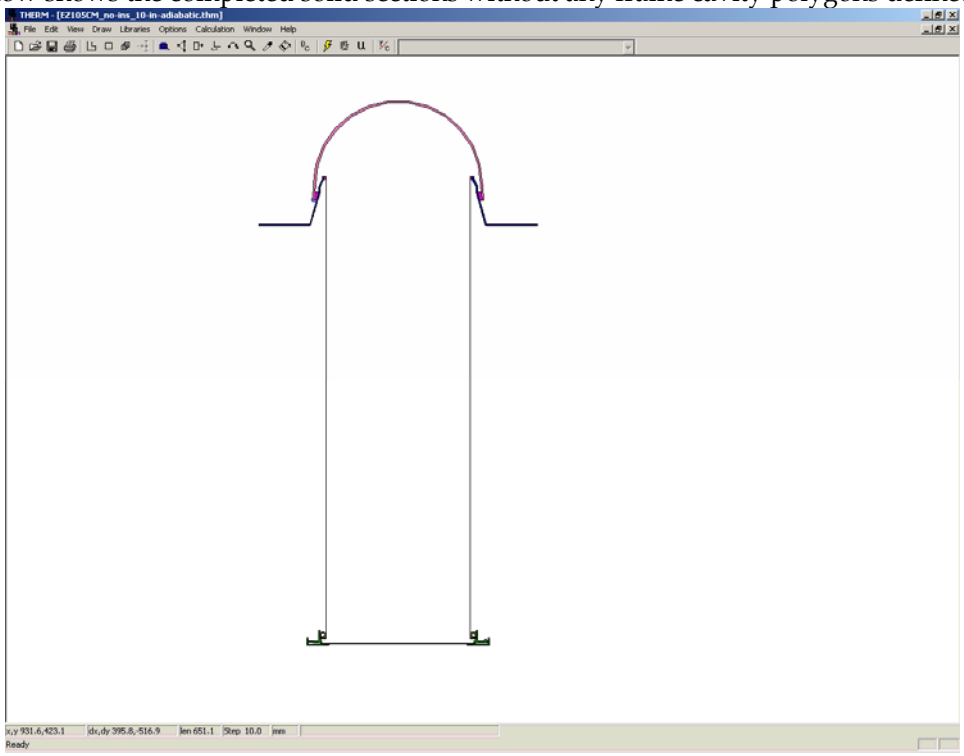

Figure 8-68 THERM drawing of all of solid sections.

Create polygons (using the **Fill** tool where possible) and assign the "Frame Cavity **NFRC 100-2001**" material for all the frame cavities except the large central shaft/dome cavity, as shown in the figure below.

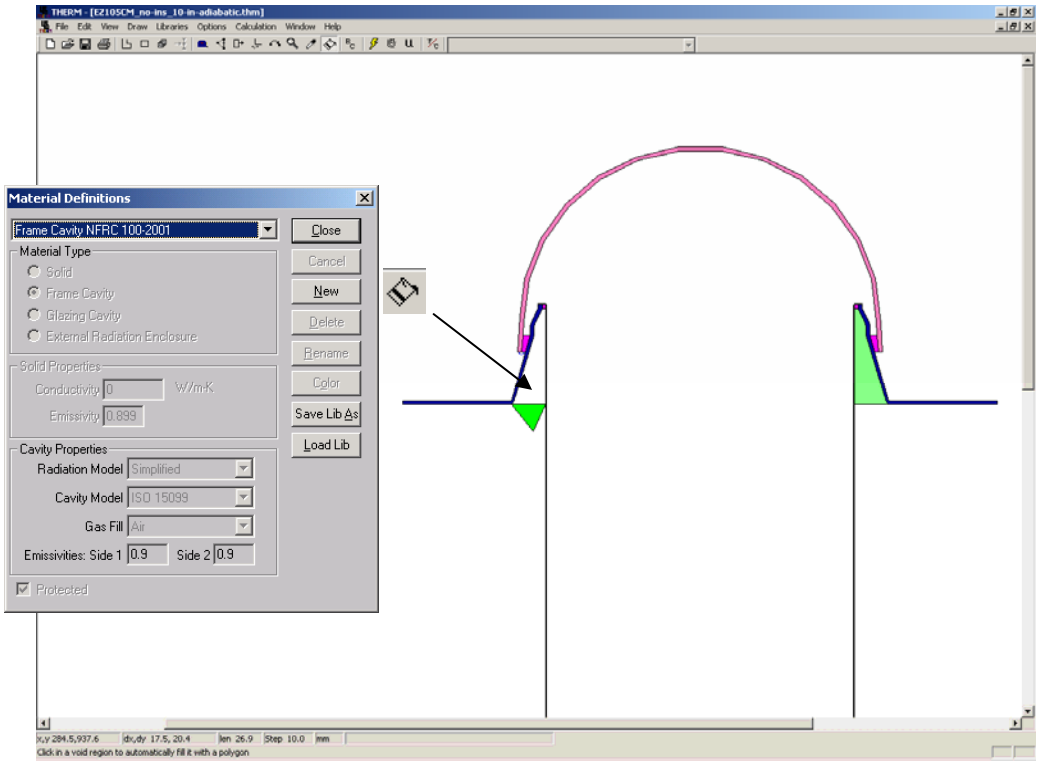

*Figure 8-69 Fill all cavities, except for shaft/dome, with the "Frame Cavity **NFRC 100-2001**" material.*

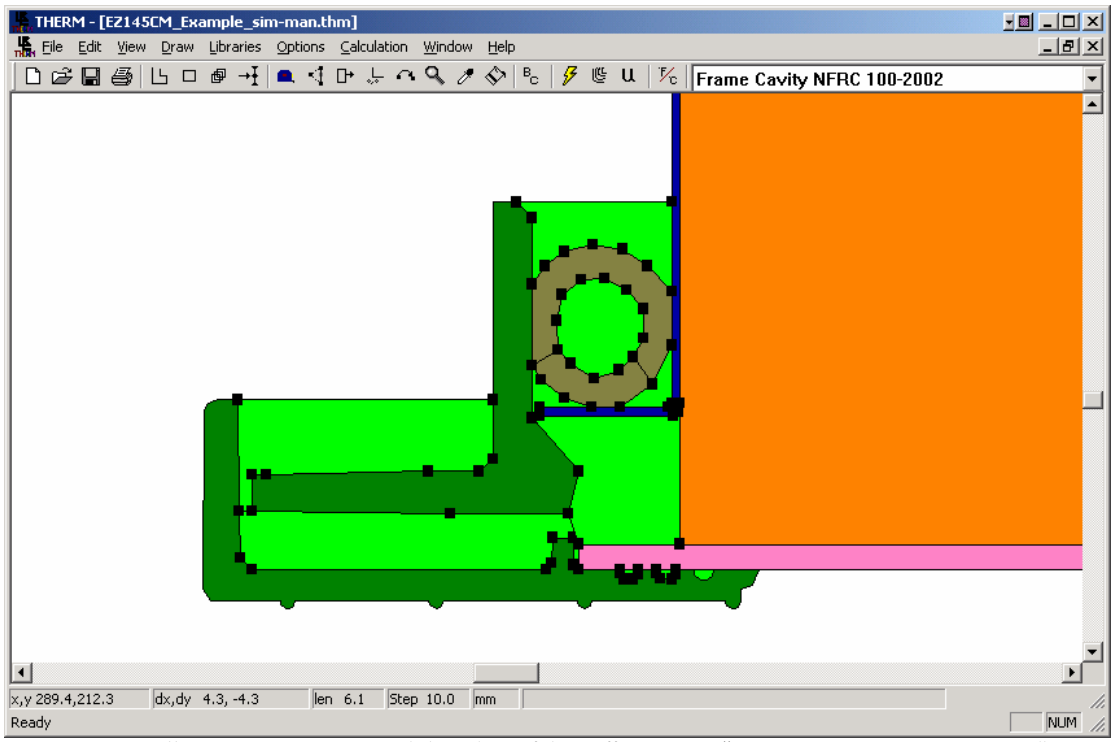

*Figure 8-70 Small Frame Cavities Around the Edges of the Diffuser set to "Frame Cavity **NFRC 100-2001**" material.*

Before the large shaft/dome cavity can be filled, it is first necessary to calculate k_{eff} for this cavity. Open spreadsheet Tubes_keff.xls and input the four yellow highlighted fields that are available for inputting data as shown in the figure below:

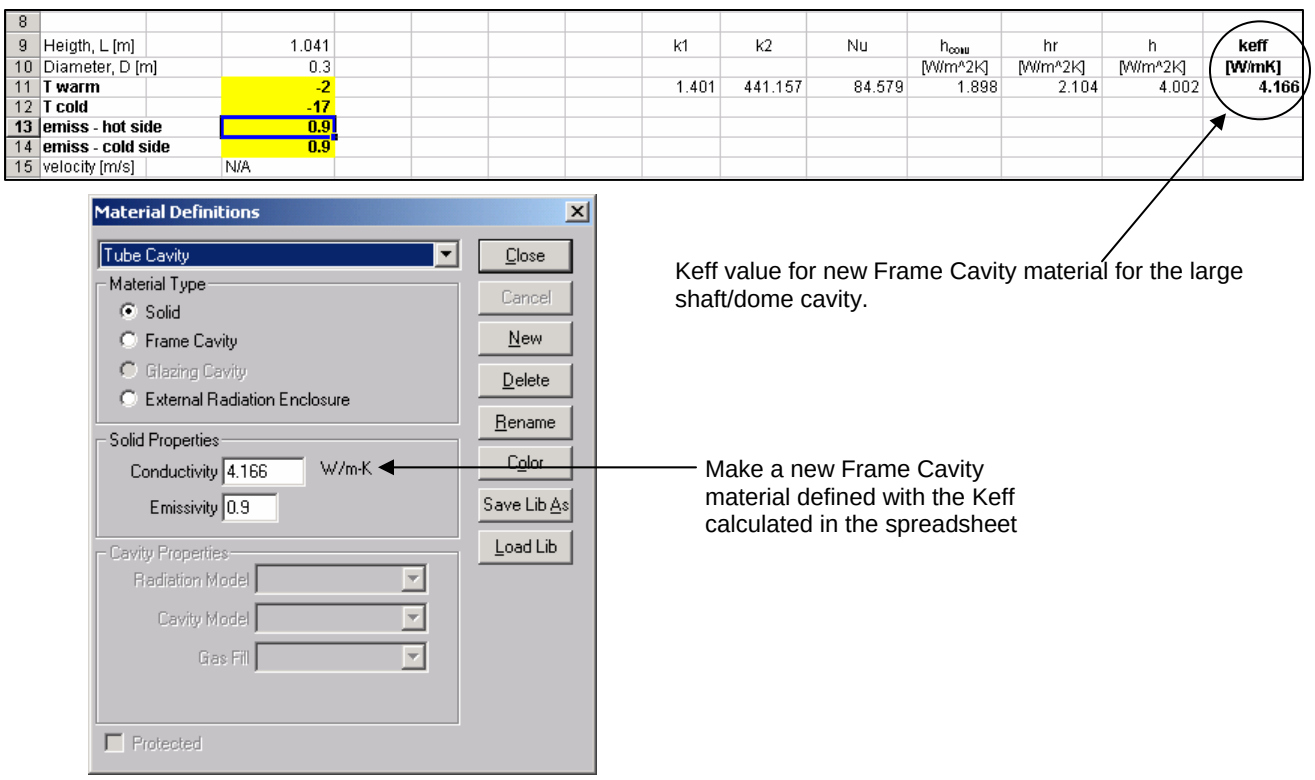

Figure 8-71 Tubes_keff.xls spreadsheet with input data highlighted in yellow

Temperatures of the inside surface of a bottom diffuser plate (T_{warm}) and top dome (T_{cold}) shall be estimated by finding respective average temperatures.

For the bottom diffuser plate, the average temperature can be estimated simply by stretching tape measure across the inside surface of the bottom diffuser plate from the left side of the shaft/dome cavity to the right side, as shown in the figure below.

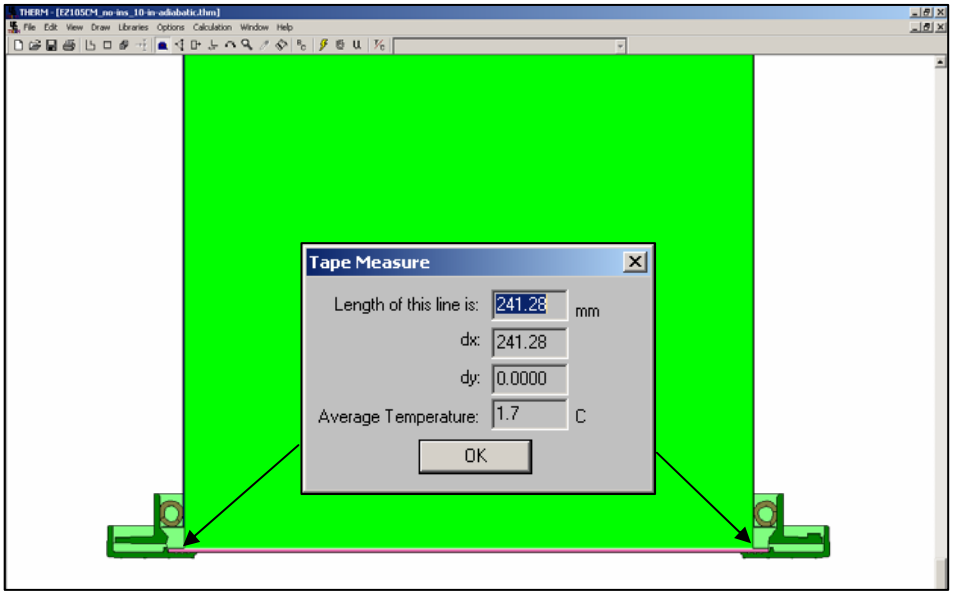

Figure 8-72. Estimate of the average temperature of the inside surface of a bottom diffuser plate

For the dome, the average temperature should be calculated in increments, because the surface consists of several straight line increments. Because the lines are of approximately the same length, the average can be estimated by summing the temperatures for all the segments and dividing by the number of segments, as shown in the figure below. As discussed at the beginning of this section, this is an iterative process, and once the model has been simulated, find the average temperatures for the diffuser plate and dome surfaces using the tape measuring tool, and if the resulting average temperatures differ by more than 1° C (2 °F) from the estimated values, the new Keff shall be calculated and the simulation repeated until the criterion of 1° C (2 °F) is met. Emissivities are input from the surface emissivities of the inside surface of the bottom diffuser plate (emiss – hot) and inside surface of the top dome (emiss – cold). The resulting k_{eff} value is calculated using the spreadsheet, and a new material shall be made with that conductivity and assigned to the shaft/dome cavity.

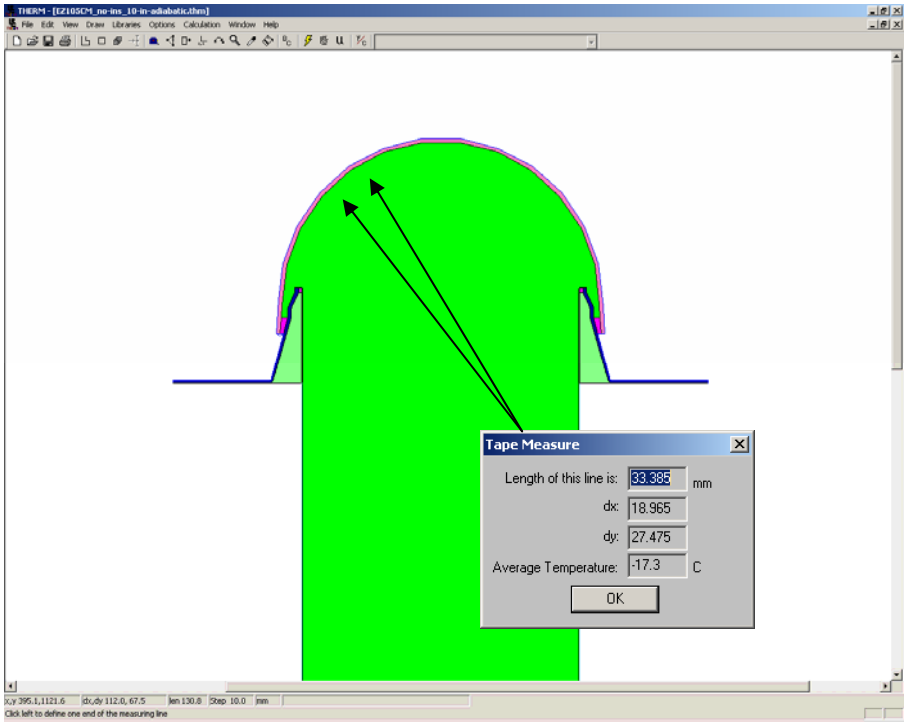

Figure 8-73. Estimate of the average temperature of the inside surface of a bottom diffuser plate temperatures of segments (usually at 15° increments)

The next step is to define the boundary conditions. The outside surface of the dome and collar should be assigned the standard "**NFRC 100-2001** Exterior" boundary condition. The bottom of the collar shall have standard "Adiabatic" boundary condition, as shown in the figure below.

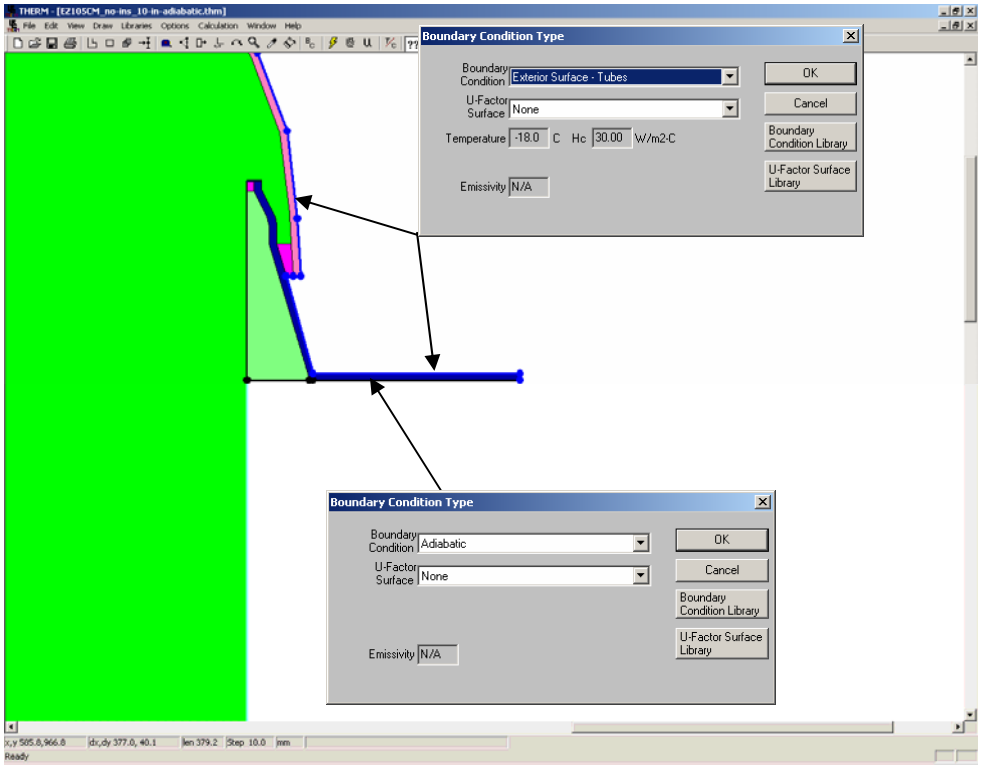

Figure 8-74. Exterior and adiabatic boundary conditions near the top dome

The outside surfaces of the shaft walls, except for the bottom 250 mm (10 inches) should be assigned a user defined "Attic boundary condition" (see description of all boundary conditions at the beginning of this section). The bottom 250 mm (10 in.) of the shaft walls and portion of the diffuser plate edge assembly shall have an "Adiabatic" boundary condition as shown in the figure below.

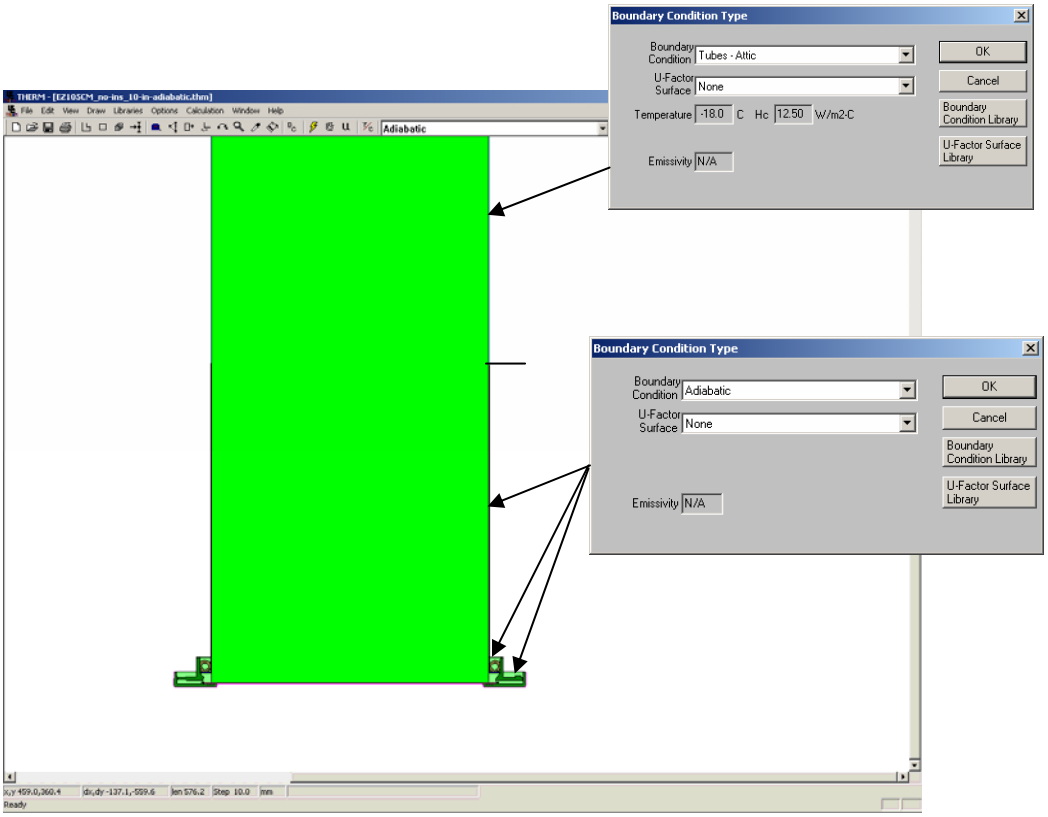

Figure 8-75. Attic and adiabatic boundary conditions on the shaft wall and near the bottom diffuser

The remaining boundary condition, "Indoor Side of Diffuser Plate" shall be applied to the exposed surfaces of the bottom diffuser plate and edge assemblies up to the point where adiabatic boundary condition ends, as shown in the figure below.

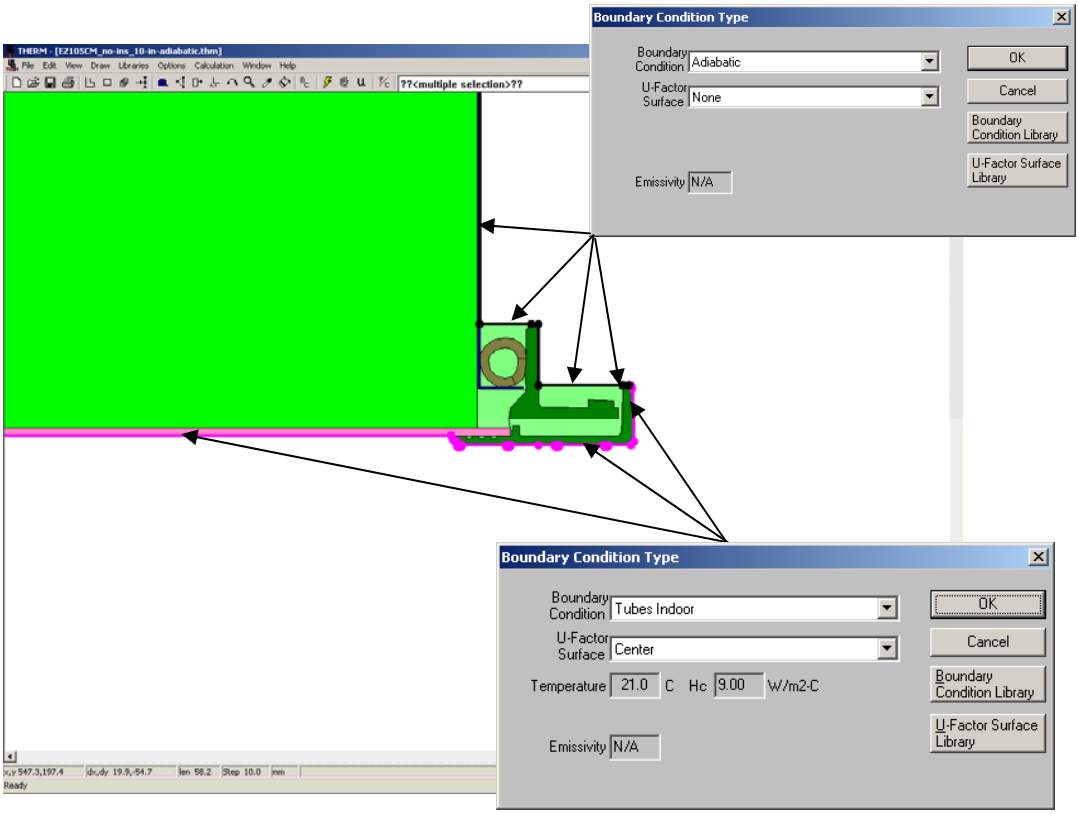

Figure 8-76. Indoor boundary condition on the exposed surfaces of the diffuser plate

After all boundary conditions are defined, the remaining task left is to define the U-factor tag. The U-factor shall be calculated for the area corresponding to the rough opening in the ceiling, which is defined on Figure 8-50. Select bottom diffuser plate and insert points on both sides of the model and define U-factor tag "Center" (or some other name if desired) for the surface between those two points.

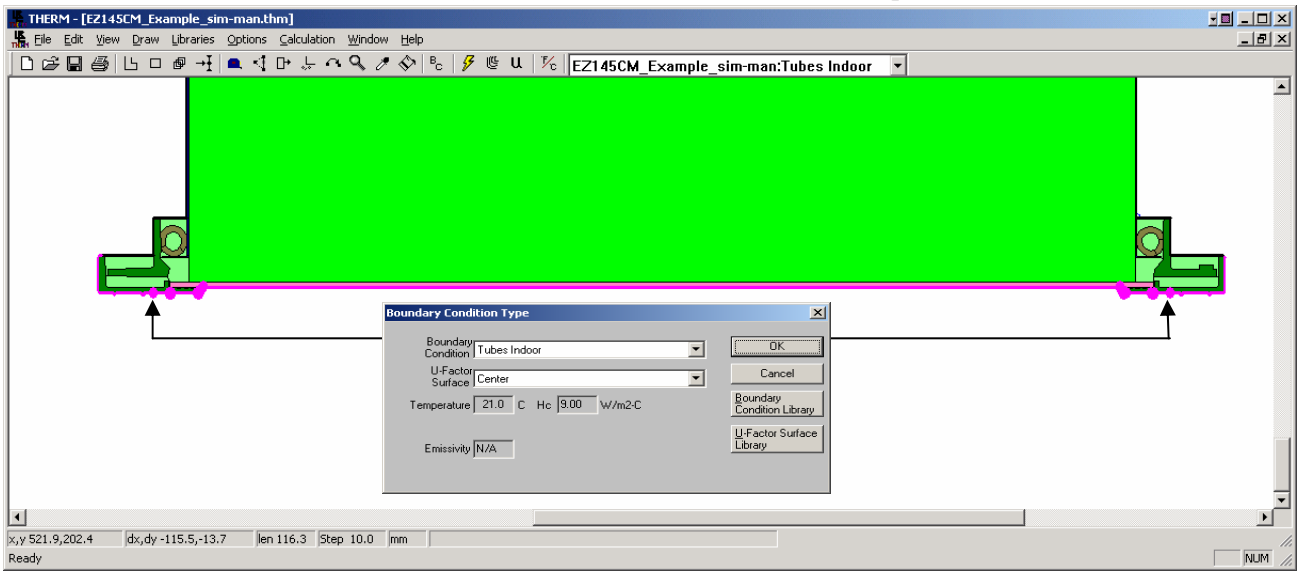

Figure 8-77. Definition of U-factor tag

This completes the definition of the model. The final step is to simulate the problem. As discussed at the beginning of this section, it is an iterative process to obtain the Keff value for the material defined for the shaft/dome cavity. Once the model has been simulated, find the average temperatures for the diffuser plate and dome surfaces using the tape measuring tool, and if the resulting average temperatures differ by more than 1° C from the estimated values, the new Keff shall be calculated and the simulation repeated until the criterion of 1° C is met. The resulting U-factor is the overall product U-factor.

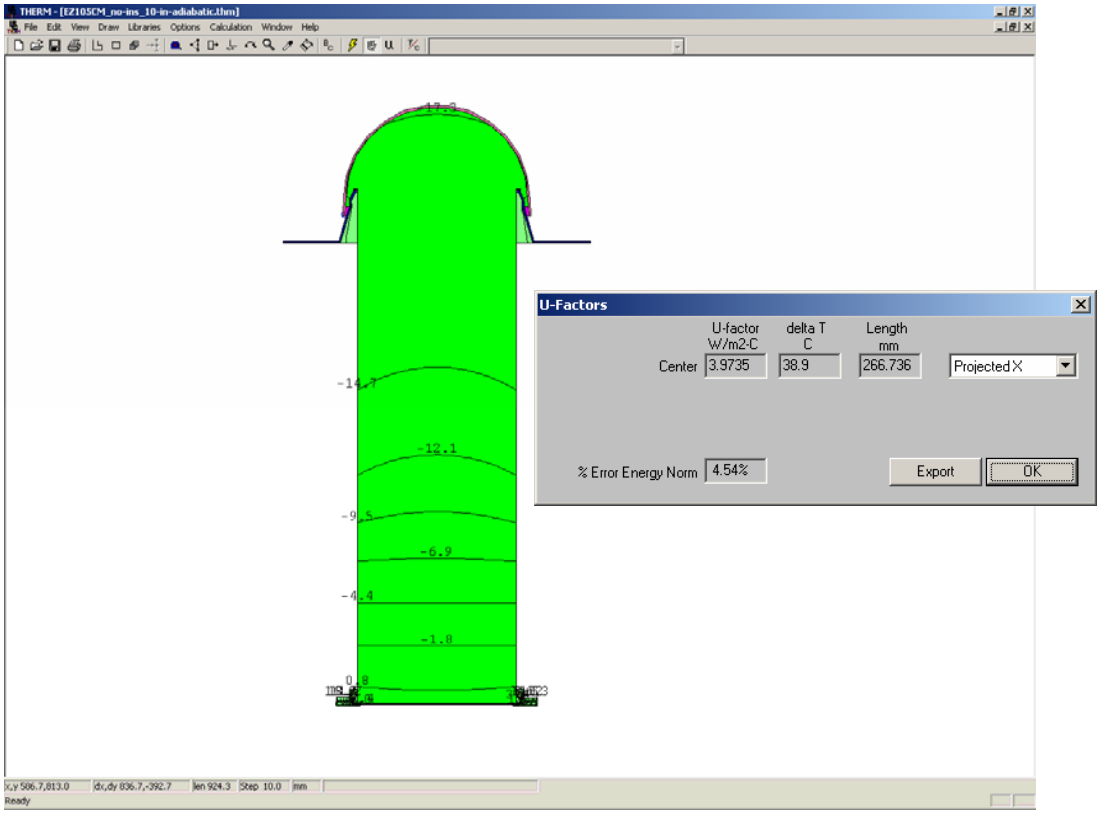

Figure 8-78. Temperature Contour plot and U-factor results

8.6.5. Example: Tubular Device Problem With the Double-Glazed Diffuser Plate

Using a double glazed diffuser plate is a variation to the design presented in the first example. This case can be modeled by first using WINDOW to calculate the effective conductivity of the gap space in a diffuser and then specifying this conductivity in the THERM model.

In WINDOW create a special boundary conditions for this case (i.e., tubes diffuser) by copying the **NFRC 100-2001** record in the Environmental Conditions Library to a new record, and set outdoor wind speed to 0 (this is the closest approximation to convection and radiation heat transfer inside shaft/dome cavity that borders cold side of this double layer diffuser). Name the new environmental condition something that makes it clear how it is to be used, such as "NFRC Tubular Skylight", as shown in the figure below.

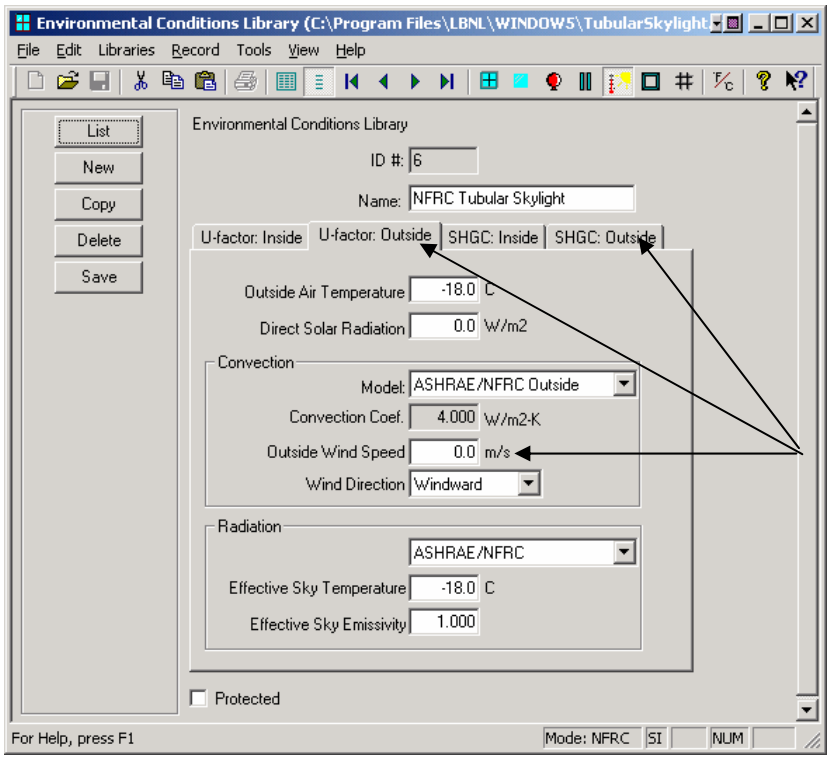

Set outside wind speed to 0 in both the U-factor Outside and SHGC Outside tabs.

Figure 8-79. New environmental conditions for calculating center of glass performance of the diffuser plate.

In the glass library, create the new glazing layer, naming it appropriately to the material used (called Lexan in this example) and specify the thickness per the manufacturer drawings. Set the conductivity and emissivity by copying the values from the library of material thermo-physical properties or value derived from NFRC 101.

In the Glazing System Library, create a new double glazed system using the newly defined entries in the Glass Library, and reference the new environmental condition, "NFRC Tubular Skylight". Set the tilt to **0** degrees, and set the gap thickness and gap gas according to the manufacturer's specifications. After the calculation is done, make note of the effective conductivity (**Keff** value under the **Center of Glass Results** tab) for later use in THERM.

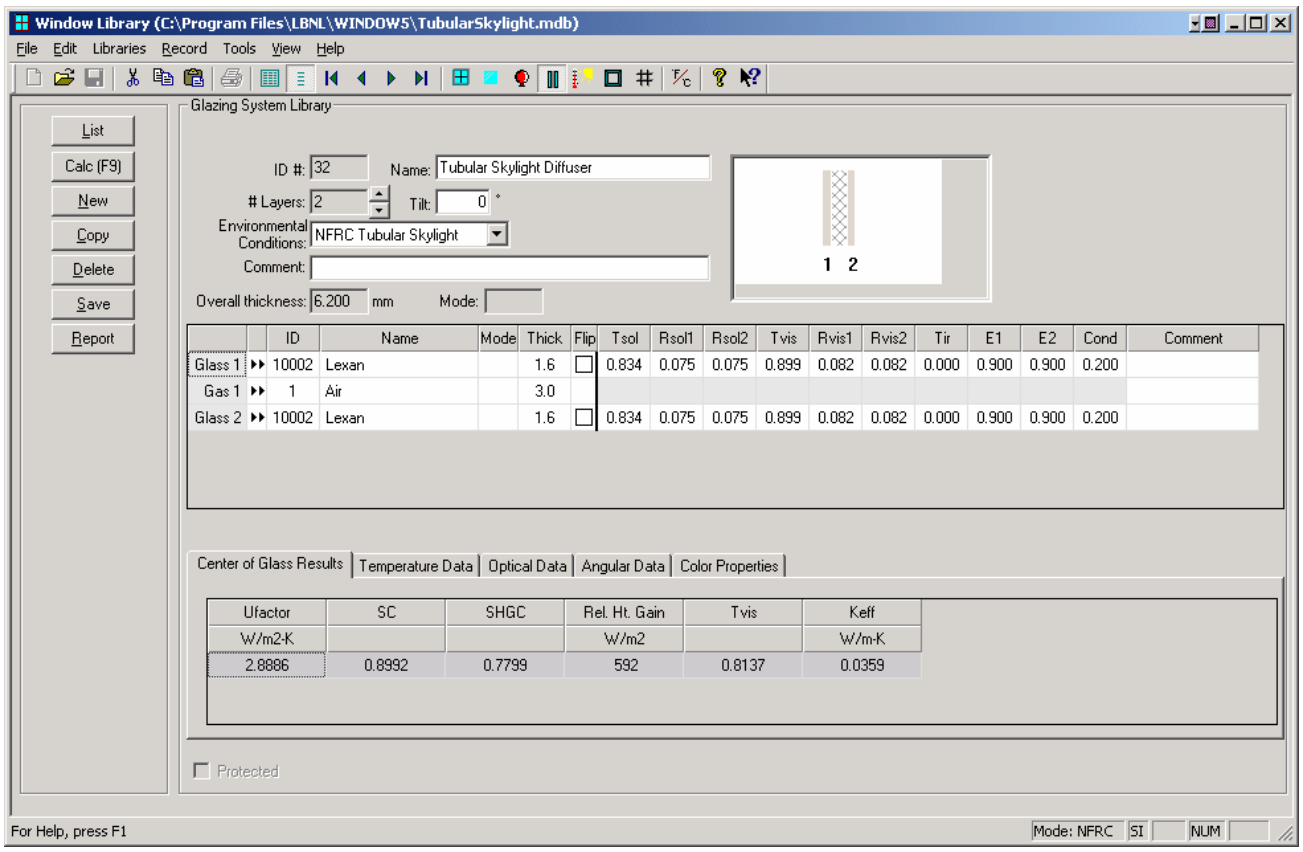

Figure 8-80. Glazing system for the double-layer diffuser plate

These calculations are only for U-factor; the SHGC results will not be valid because the layers were created without spectral data. When performing a calculation on this glazing system, the following message will appear, indicating that there is not spectral data associated with the glazing layers.

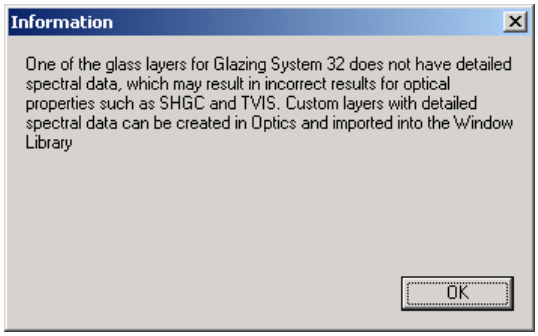

Figure 8-81. Message at calculation time, indicating that there is not spectral data for the glazing layers. Therefore, the SHGC value will not be accurate.

In THERM draw the geometry of the double-layer diffuser plate, including the detail of spacer and draw the rest of the geometry as per original example.

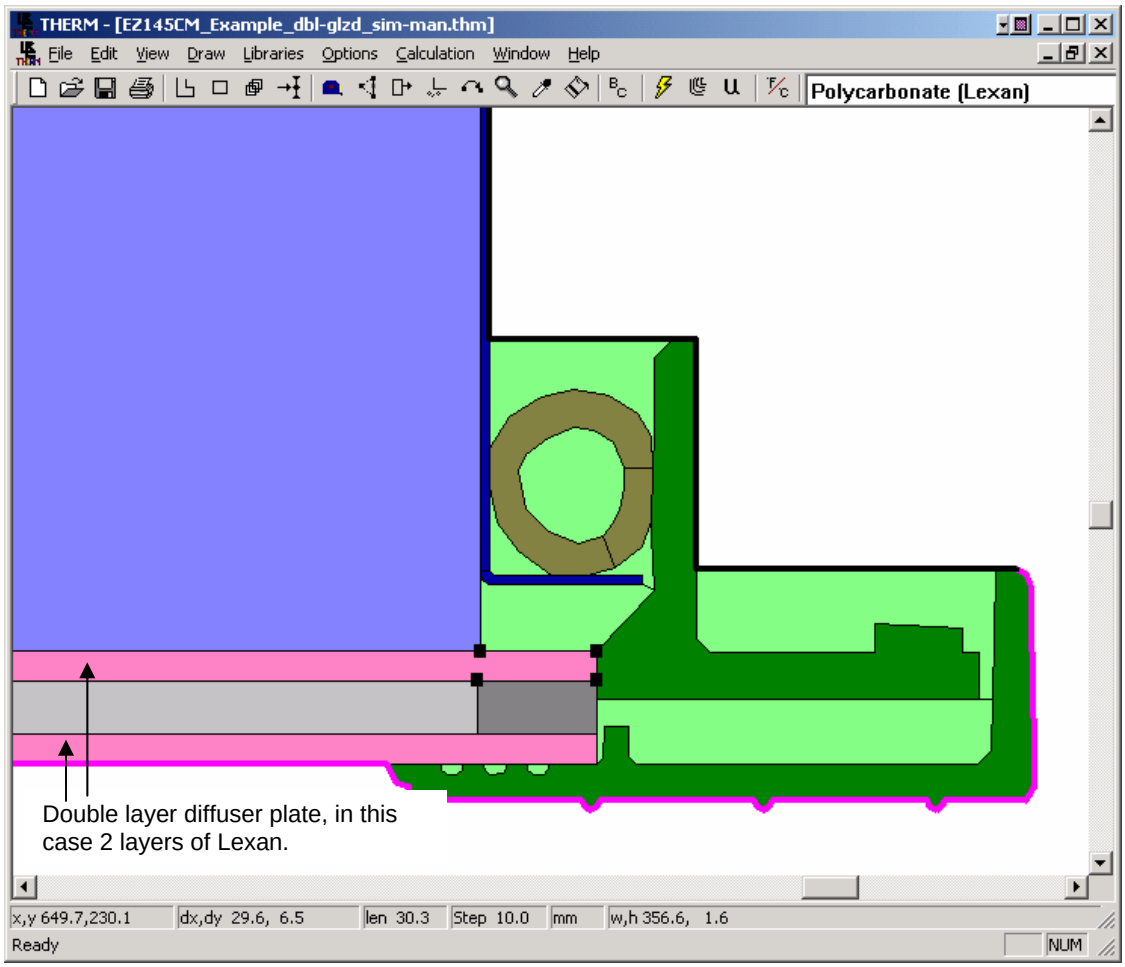

Figure 8-82. THERM model of double-layer diffuser plate

Define a new material with the conductivity equal to the effective conductivity (Keff) calculated in WINDOW and fill the cavity with that material. As discussed at the beginning of this section, it is an iterative process to obtain the Keff value for the material defined for the shaft/dome cavity. Once the model has been simulated, find the average temperatures for the diffuser plate and dome surfaces using the tape measuring tool, and if the resulting average temperatures differ by more than 1° C (2 °F) from the estimated values, the new Keff shall be calculated and the simulation repeated until the criterion of 1° C (2 °F) difference is met.

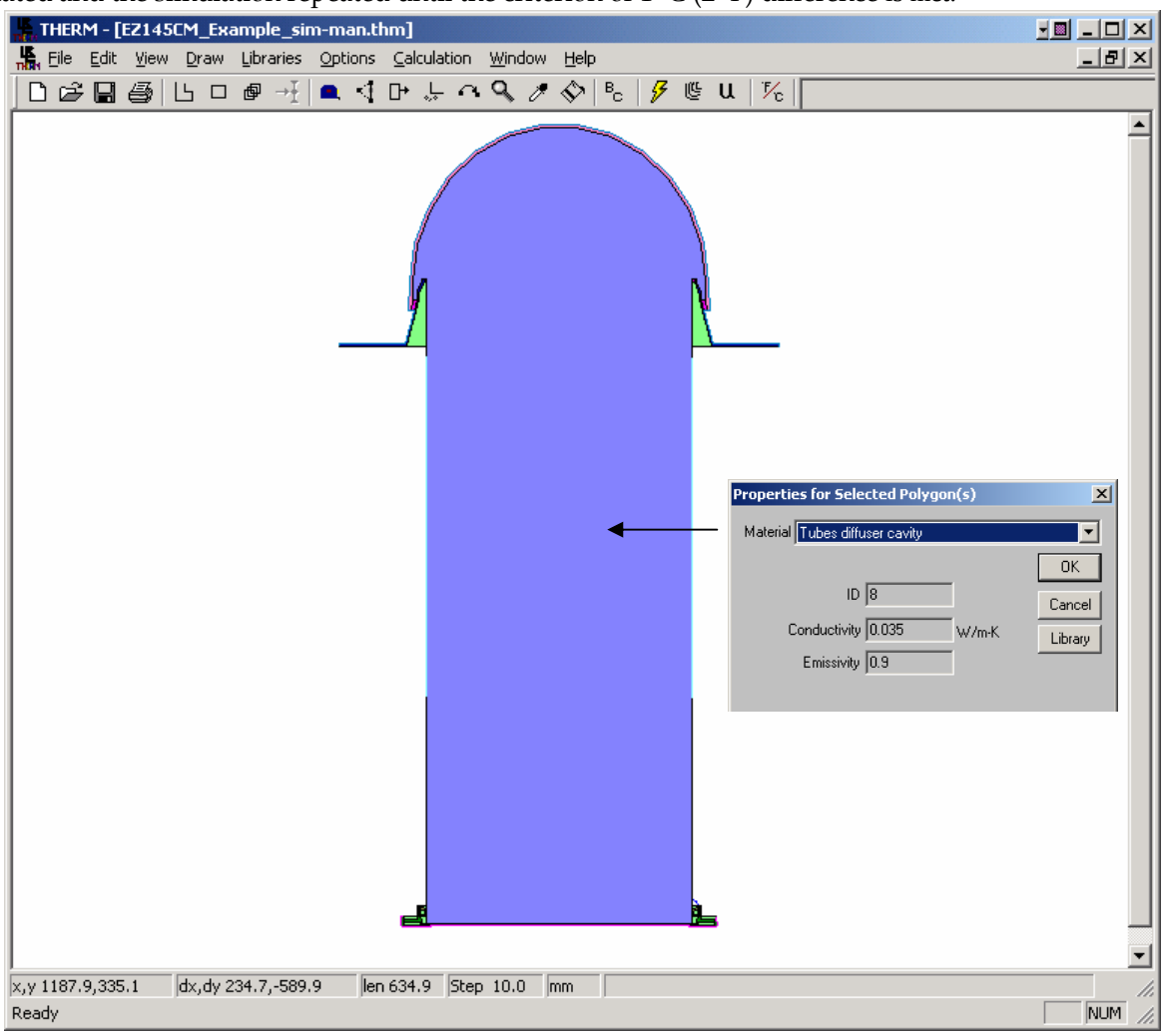

Figure 8-83. THERM model of double-layer diffuser plate

Define the same set of boundary conditions as in previous example and perform calculation. The following are results for an example where the two layers of Polycarbonate diffuser plates, separated by 3 mm (0.1181 inches) of air space and butyl spacer, are used.

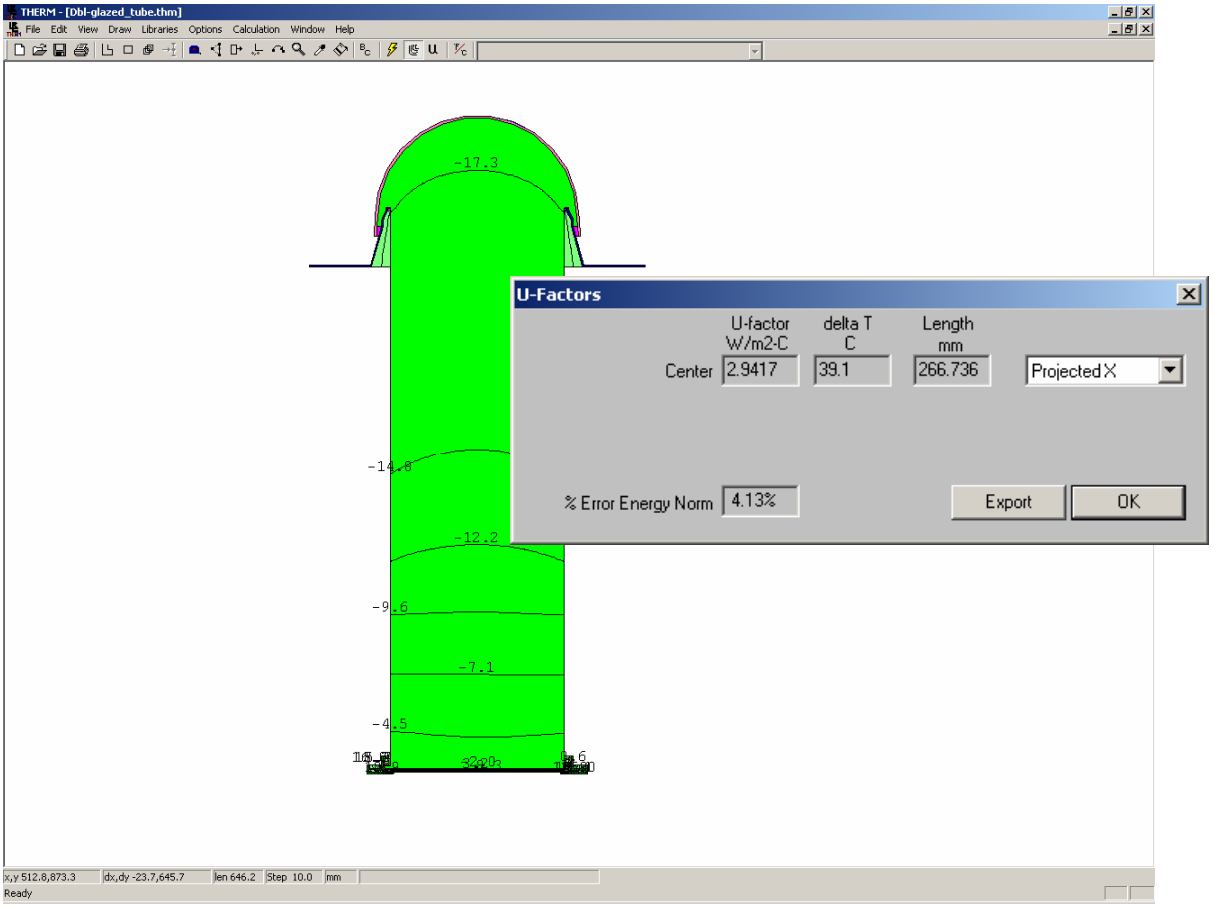

Figure 8-84. Heat Transfer Results for the Tubular Daylighting Device, Incorporating Double-Layer Diffuser Plate

Note that the overall U-factor has been reduced from 3.97 W/m²-°C (0.699 Btu/h-ft²-°F) to 2.94 W/m²-°C (0.518 Btu/h-ft²-°F), by using double-layer configuration for the diffuser plate instead of the original single layer. This analysis does not include solar optical properties or Solar Heat Gain Coefficient calculation, which will also be affected by the introduction of double-glazed diffuser plate. It is likely that the daylighting performance would be negatively affected due to the presence of an additional diffuser plate, which will reduce overall visible transmittance (VT).

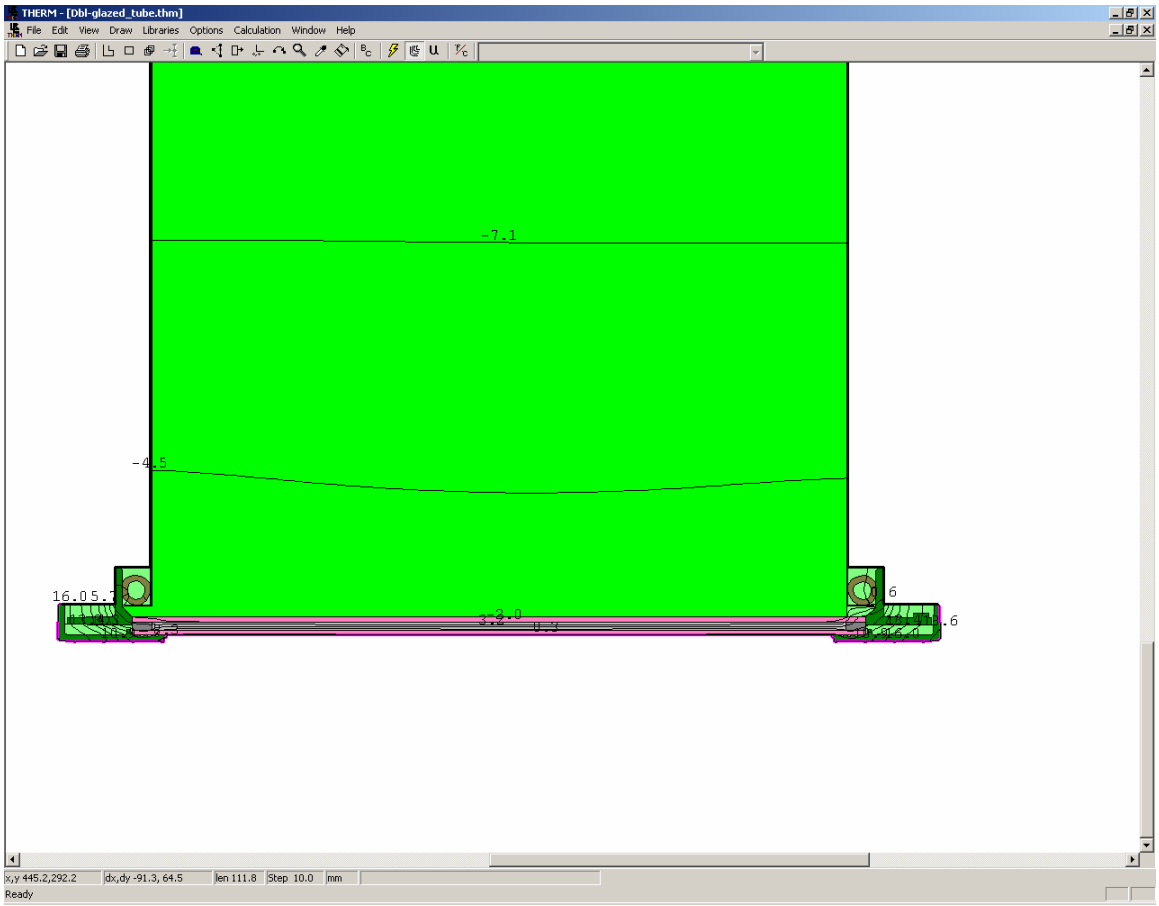

Figure 8-85. Zoomed-in Region Near the Diffuser Plate

References:

Curcija, D.C. 2001. "Proposed Methodology for Modeling Tubular Skylights For NFRC Rating Purposes." CEERE Technical Report. June, 2001.

8.7 Doors

Swinging entry doors are modeled differently than window products because there are more opaque sections to be modeled in THERM. The procedures for modeling doors are included in *NFRC 100:* and that document should be reviewed in detail before modeling any entry door systems.

NFRC has defined nine regions within a door that need to be modeled. These regions include:

- Frame Area
- Lite Frame Area
- Divider area
- Edge-of-divider area
- Edge-of-Lite Area
- Center-of-lite area
- Door Core Area
- Panel Area
- Edge-of-Panel Area

NFRC 100 contains several figures which illustrate the location of the door sections to be modeled in THERM.

When modeling glazing options with caming, the NFRC default caming can be used.

A spreadsheet must be used to do the door area-weighting from the THERM files, because the current version of WINDOW does not area-weight doors. In THERM, the U-factor Surface Tags can have any name and as many U-factor Surface Tags can be defined as are needed to accurately describe the model. (See Section 6.2.4, "Define U-factor Surface Tags in the *THERM User's Manual*), so define as many U-factor Surface Tags as needed and name them descriptively.

Chapter 9 contains a door example, which describes in detail the THERM modeling steps.

8.8 Spacers

8.8.1. Overview

THERM has the capability to model spacers in great detail, so that modeling of spacer effective conductivity is no longer needed. Spacer models can be easily reshaped in THERM, and the program's cut and paste feature allows spacers to be copied into each cross section as needed. A library of spacer models can be produced for each spacer type. See the *THERM User's Manual*, Section 3.5, "Adding a Custom Spacer". A sample spacer, spacer.thm, is included on the THERM installation CD.

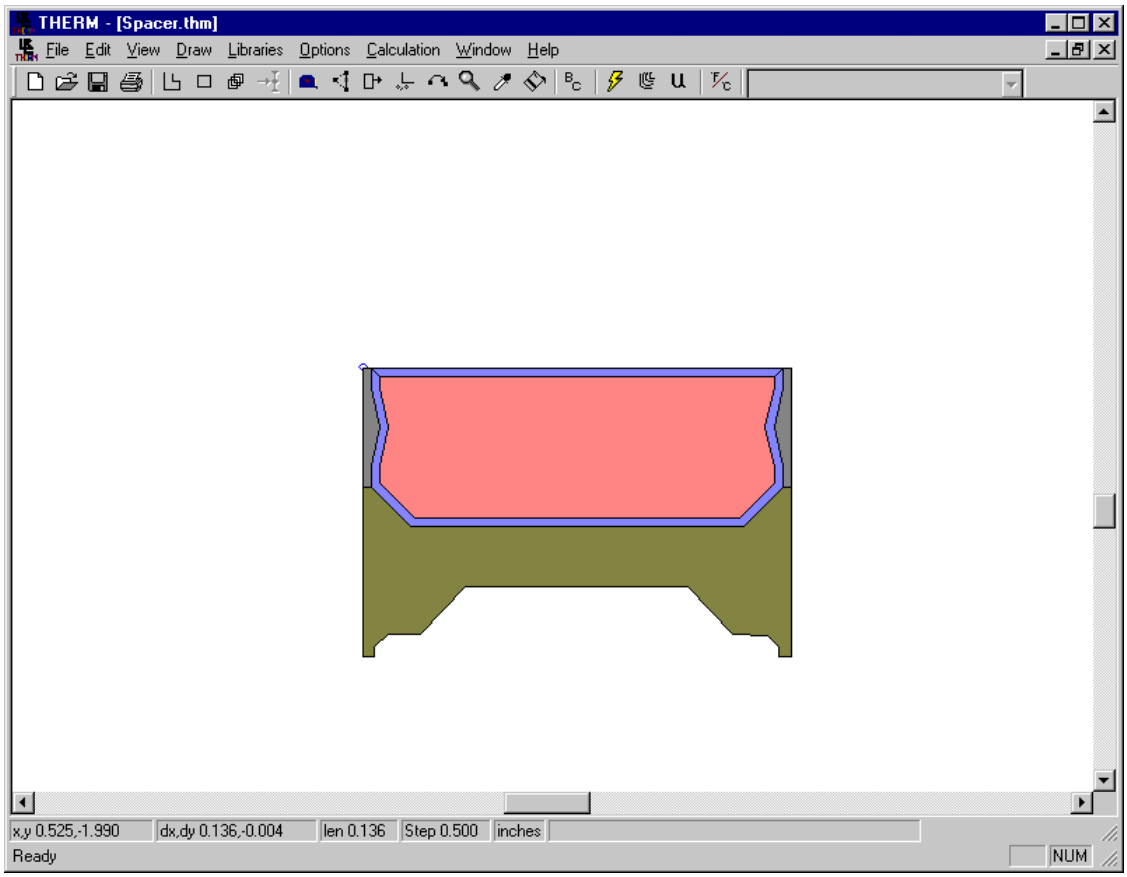

Figure 8-86. spacer.thm sample file.

8.8.2. Linking Glazing Cavity properties (imported from WINDOW) for Open Spacers

The properties of a glazing cavity can be linked to another polygon in order to properly model spacers that are open to the glazing system cavity. Section 5.11.5, "Linking Materials Properties of Polygons" in the *THERM User Manual* explains this methodology in detail.

To Link the properties of two materials, follow these steps:

- Select the polygon that is to linked to another polygon
- Select the Libraries/Create Link menu choice.
- The cursor will become an Eye Dropper. Click the Eye Dropper cursor in the polygon to be linked to. The material properties of the first polygon are not linked to the material properties of the second polygon.

When using the multiple glazing calculation option, THERM will automatically use the glazing system cavity properties for each glazing option for the linked polygon.

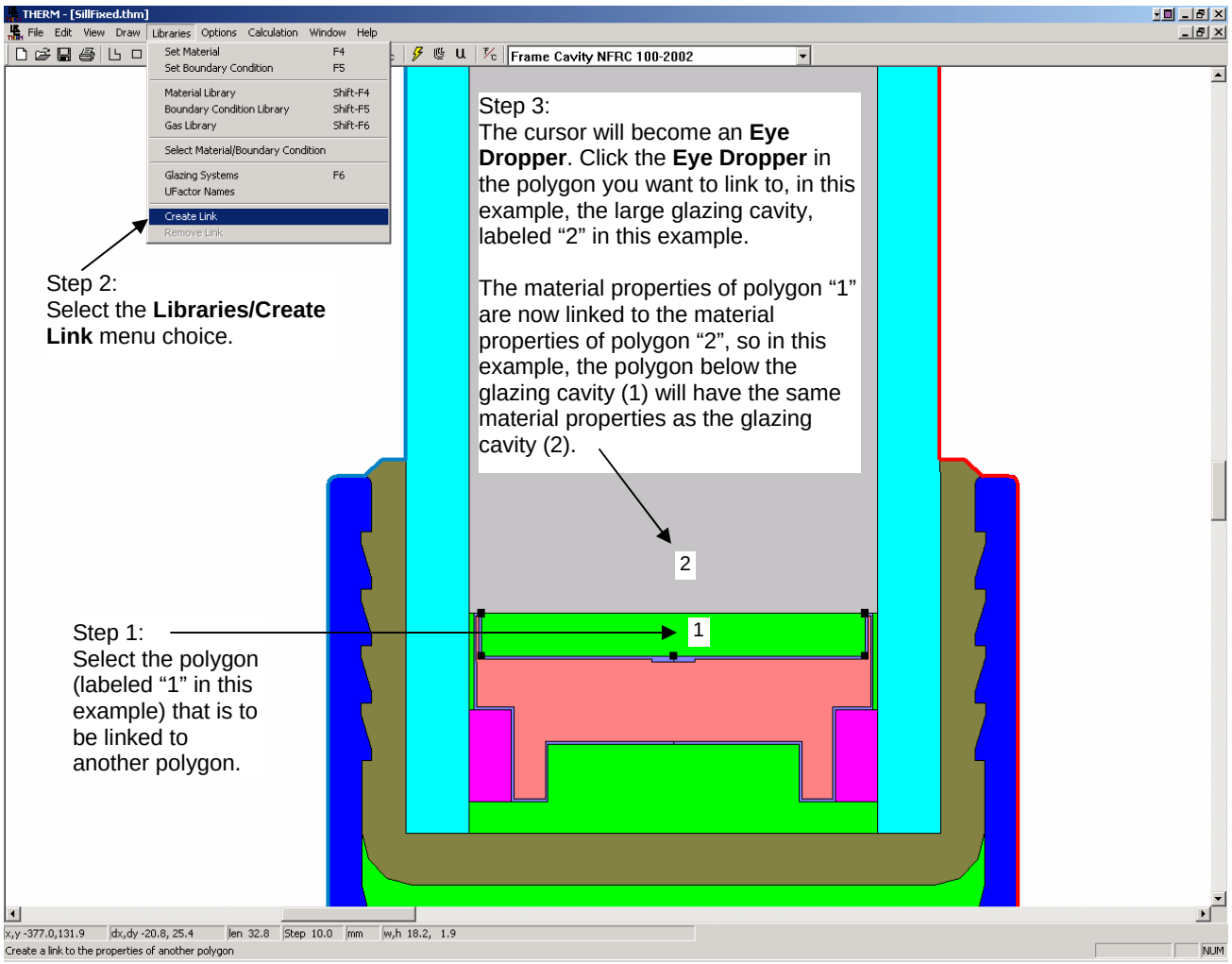

Figure 8-87. Link the open spacer cavity to the glazing system cavity using the Library/Create Link feature .

8.9 Non Continuous Thermal Bridge Elements

Bolts skip and debridge thermal break, including partially de-bridged thermal break material, and thermally slotted cross section shall be included in the model using the concept of *isothermal planes*. The isothermal planes methodology calculates an effective conductivity of the bridging material based on area weighting the sections of the product with and without thermal bridging material based on the bridging material spacing dimensions. This method is also valid for other regularly spaced thermal bridges such as skip-and-debridged systems.

The effect on the performance of a curtain wall system due to bolts is explained in detail in an ASHRAE paper published in 1998 entitled *"The Significance of Bolts in the Thermal Performance of Curtain-Wall Frames for Glazed Facades", by Brent Griffith, Elizabeth Finlayson, Mehrangiz Yazdanian and Dariush Arasteh.*

The THERM model to be simulated for the final result is one in which the actual materials of the thermal bridging elements are replaced with a user-defined material having an effective conductivity which represents the area-weighted value that combines the bridging and non-bridging elements.

Figure 8-74 below illustrates an example of a curtain wall system which would require that the thermal bridging elements, in this case the bolts, be modeled using the isothermal planes method.

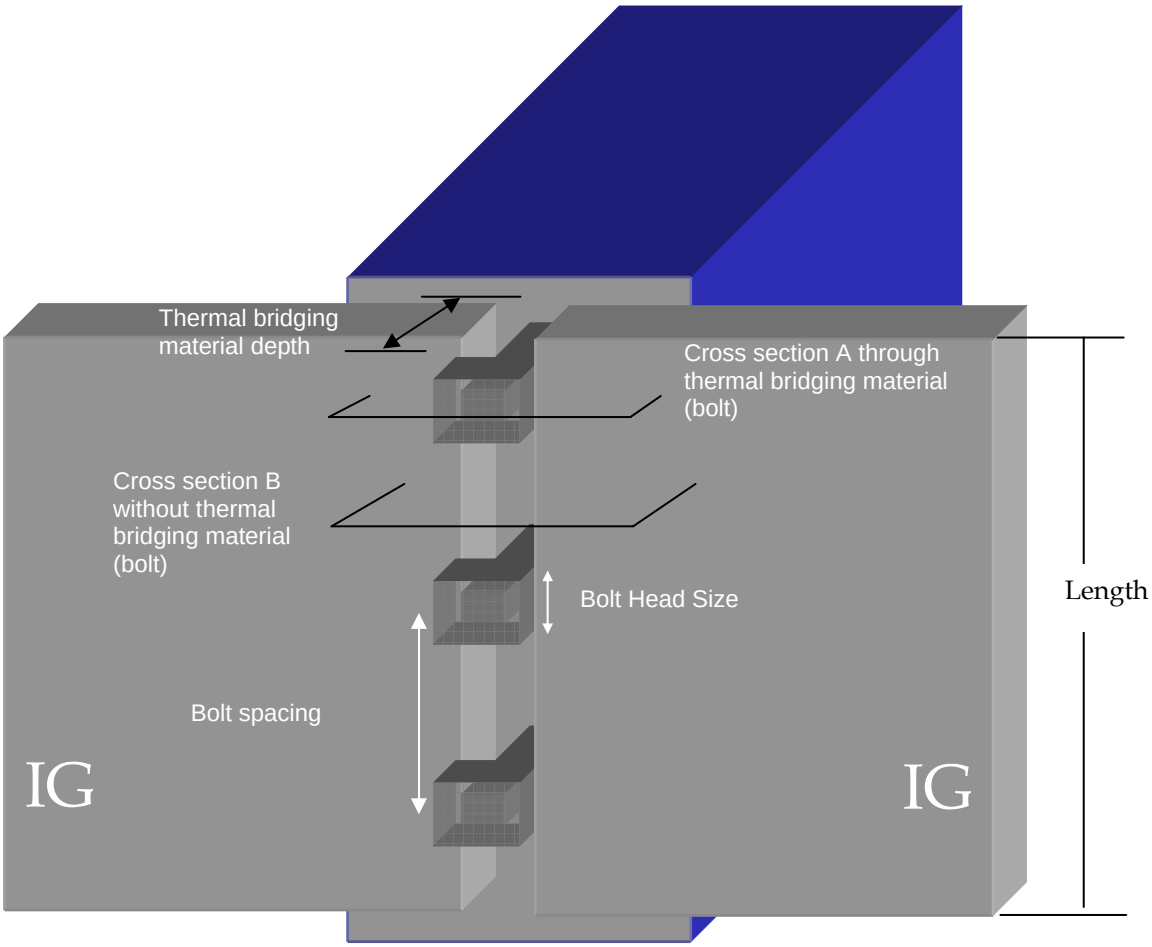

Figure 8-88. Example of a curtain wall system with regularly spaced bolts which act as thermal bridges.

8.9.3. Modeling Steps

The steps for constructing the final THERM model to be simulated are the following:

1. Draw the THERM model without the thermal bridging material.
2. Determine the conductivities of the materials that the thermal bridging material replaces.
   - Conductivities of *materials* can be obtained from the THERM Material Library
   - Conductivities of *air-filled* cavities (such as frame cavities) are assumed to be 0.024 W/m-K (or 0.014 Btu/hr-ft-^{o}F).
3. Using a cross-section that contains the non-thermal bridging material, measure the depths of each element of the non-thermal bridging material that will have a different thermal conductivity in the non-bridging cross section.
4. Use the conductivities of the non-thermal bridging materials and depths of the non-thermal bridging materials in Equation 2 below to determine the Resistance (R) for each non-thermal bridging element.
5. Sum the resistances (Rt) and divide by the total depth of the non-thermal bridging elements to obtain Kn, as shown in Equation 3, to calculate the conductivity of the non-thermal bridging elements
6. Calculate the fraction of thermal and non-thermal bridging material along the length of the façade using Equations 4 and 5.
7. Calculate the final effective conductivity value for the thermal bridging elements using Equation 1.
8. In THERM, define a new material with the Keff value derived in Step 7, and assign it to the cross section polygons that represent the thermal bridging elements.
9. Simulate the model.

8.9.4. Equations

Calculate the effective conductivity of thermal bridging elements (e.g., bolts, screws, etc.)

Keff= Fb*Kb + Fn*Kn *Equation 1*

where

Fb = Fraction of the Length which contains the thermal bridging elements (see equation 4 below)

Fn = the fraction of the Length which contains non-thermal bridging elements(see equation 5 below)

Kb = conductivity of the thermal bridging elements

Kn = conductivity of the non-thermal-bridging elements
(from the sum of the resistances, Rt, of individual elements from Equation 2 below)
Assume a default value of 0.24 W/m-K for air cavities.

This methodology should be applied with the following caveats:

- If less than 1% (to obtain percentage, multiply fraction by a 100) of the Length is made of thermal bridging elements (such as stainless steel), i.e., Fb < 0.01, do not model the thermal bridging elements.
- If between 1% and 5% of the Length is made of thermal bridging elements (0.01 <= Fb <= 0.05) and if the conductivity of the thermal bridging elements is more than 10 times the conductivity of the thermal break, model the thermal bridging elements using the keff calculated in Equation 1.
- If more than 5% of the length is made of thermal bridging elements (Fb > 0.05), model the thermal bridging elements using the keff calculated in Equation 1.

Calculate the total resistance of the non-thermal bridging elements, Rt, by summing individual resistances (non-thermal bridging element conductivity) for each non-thermal bridging element using the formula:

$Rt = \Sigma(D / k)$ *Equation 2*

Where:

Rt = Sum of the thermal resistances of the individual non-thermal bridging material. Units: $m^2 \cdot K/W$ (SI), or $hr \cdot ft^2 \cdot °F/Btu$ (IP)

D = Depth of the individual non-thermal bridging elements that will be substituted by the calculated effective conductivity. Units: m (SI), or ft (IP), or (in) (alternate IP)k = conductivity of the individual non-thermal bridging elements that will be substituted. Units: $W/m \cdot K$ (SI), or $Btu/hr \cdot in \cdot °F$ (IP), or $Btu \cdot in/hr \cdot ft^2 \cdot °F$ (alternate IP)

Therefore:

Kn=Dt/Rt *Equation 3*

Where:

Dt = Total depth, which is the sum of the depths of the individual non-thermal bridging elements

Calculate the fraction of thermal bridging material to non thermal bridging material as follows:

Fb=Wb / Sb (%Fb=Fb·100) *Equation 4*

Fn=1-Fb *Equation 5*

Where:

Wb = Bridging material width

Sb = Bridging material spacing

8.9.5. Example 1: Bolts in Curtain Wall

Note: This example is only presented in SI units and is not translated into IP units.

The following figures show two cross sections of the curtain wall in Figure 8-74. Figure 8-75 represents the cross section of the curtain wall where the bolt occurs (screw threads should be averaged and not drawn explicitly), and Figure 8-76 represents the cross section of the curtain wall where the bolt does not occur. The geometry of the cross-section in Figure 8-75 would be used for the final THERM run, and the conductivity of the materials used to define the bolt would be changed to the value derived from the methodology explained in this section. The geometry in Figure 8-76 is drawn only to obtain the conductivity values for calculating the conductivity of this "averaged" material.

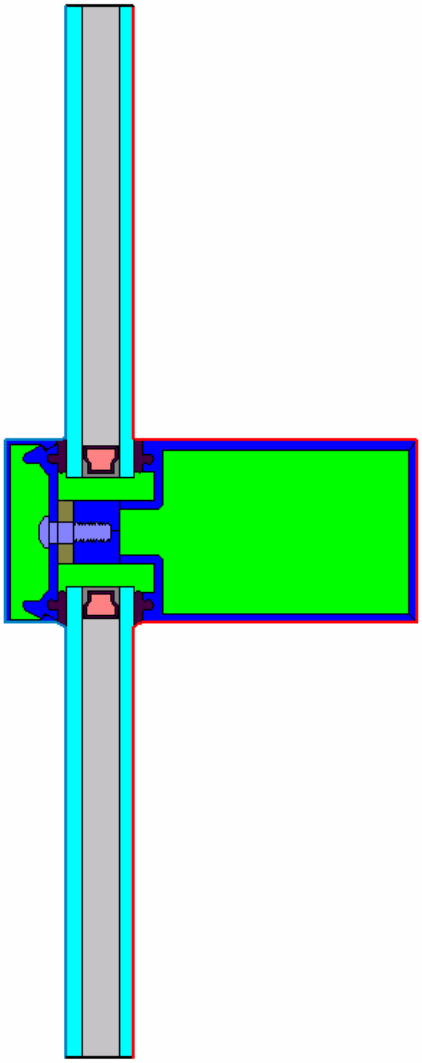

Figure 8-89. THERM cross section where the bolt occurs (curtain wall bolt.thm).

Figure 8-76 shows the conductivity values for the four materials that must be obtained for the calculation. Material 1 and 4 are air cavities, and the conductivity is assumed to be 0.024 W/m-K.

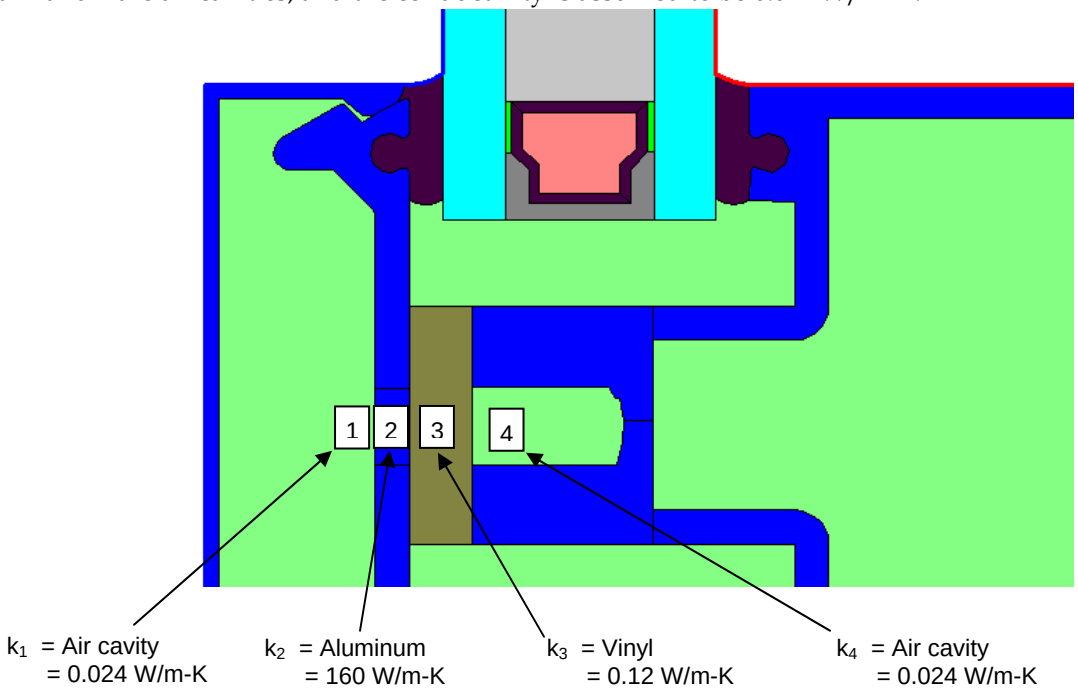

Figure 8-90. Materials in the non-bridging material cross section for which conductivities must be obtained.

Figure 8-77 shows the depths of each of the thermal bridging elements that are used in the Keff calculation.

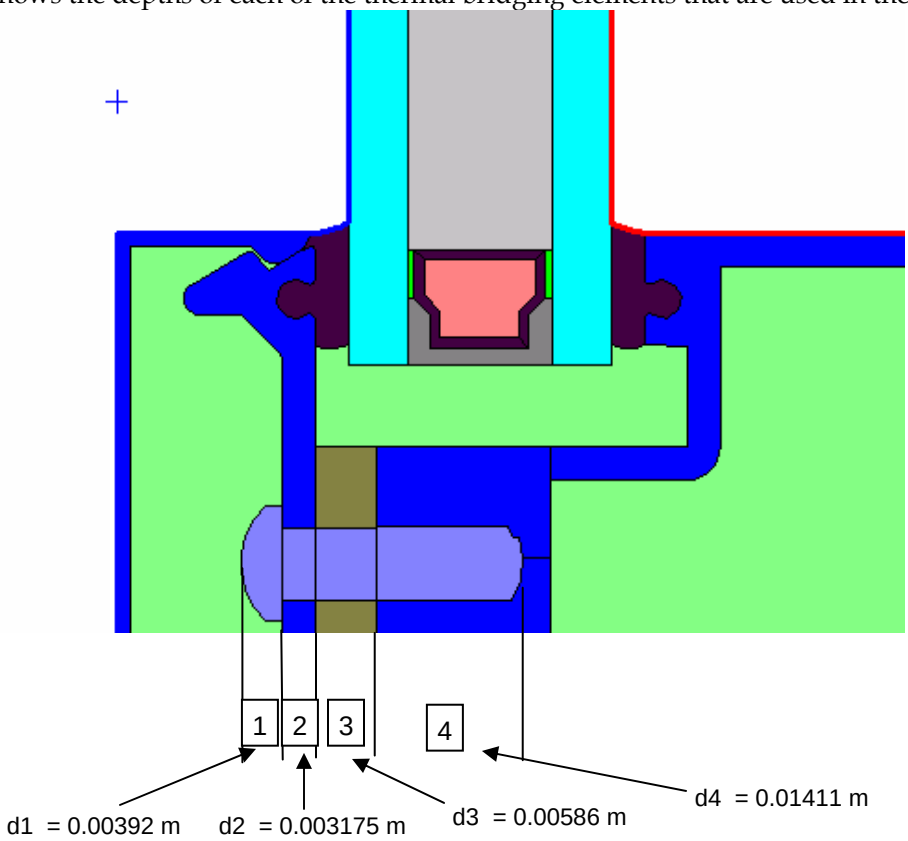

Figure 8-91. Material depths for the thermal bridging materials.

Table 8-1 shows the conductivity and depth values used to calculate the R for each non-thermal bridging element using Equation 2.

Table 8-1

Cross Section Element	Material	**Conductivity [W/mK]**	**Depth (m)**	**R [m2K/W]**
1	Air cavity (default value)	0.024	0.00392	0.16333
2	Aluminum (conductivity from THERM Material Library)	160	0.003175	0.0000198
3	Vinyl (conductivity from THERM Material Library)	0.12	0.00586	0.049
4	Air cavity (default value)	0.024	0.01411	0.587917
	Total		**0.02706**	**0.800103**

Calculate Rt as follows:

$R_t = \Sigma(d/k)$

$= (d_1/k_1) + (d_2/k_2) + (d_3/k_3) + (d_4/k_4)$

$= (0.00392 / 0.024) + (0.003175 / 160) + (0.00586 / 0.12) + (0.01411 / 0.024)$

$= 0.800103\ m^2K/W$

$D_t = 0.00392\ m + 0.003175\ m + 0.00586\ m + 0.01411\ m$

$= 0.02706\ m$

Calculate the conductivities as follows:

$Kn = D_t/R_t$

$= 0.02706 / 0.800103$

$= 0.033821\ W/m \cdot K$

Kb = 14.3 W/m·K (stainless steel)

Calculate the fraction of bolt to no bolt as follows:

Wb = Bolt head width

= 11.1 mm

Sb = Bolt spacing 12′′

= 304.8 mm

Fb = Wb / Sb

= 11.1 mm / 304.8 mm

= 0.036 (%Fb=0.036·100 = 3.6%)

Fn = 1-Fb

= 1- 0.036

= 0.964

Calculate the new Keff, which will be used in THERM as follows:

Keff = Fb*Kb + Fn*Kn

Keff = (0.036 * 14.3)+(0.964 * 0.033827)

= 0.55 W/m·K

In THERM, create a new material in the Material Library with this Keff. In the THERM cross section, the bolt material should be changed from Stainless Steel to this new material. The resulting cross section is a 2-D thermal equivalent of the cross section with and without the thermal bridging material.

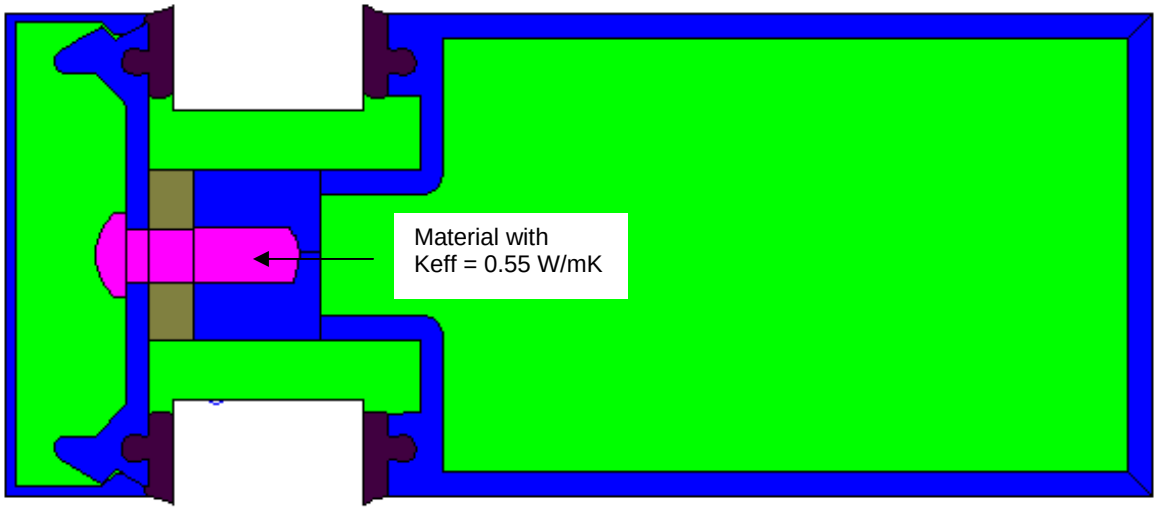

Figure 8-92. Final THERM model with boundary conditions defined.

8.9.6. Example 2: Thermally slotted cross-section

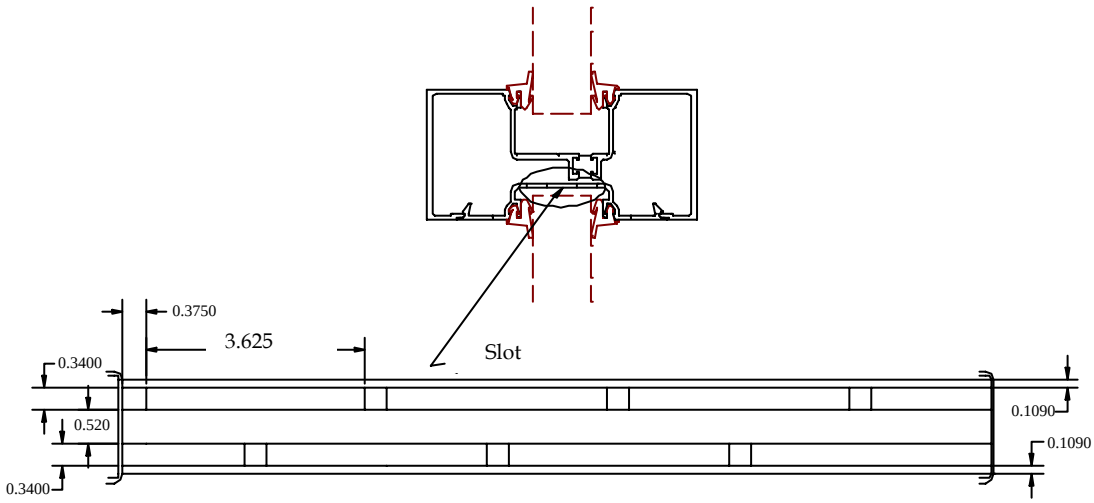

Figure 8-93. DXF for thermally slotted cross section.

Step I

Skip = 0.009525 m (0.375 in)

Slot (Air) = 0.092075 m (3.625 in)

Interval = 0.092075 m (3.625 in) + 0.009525 m (0.375 in)

= 0.1016 m (4 in)

=)

Fb = 0.009525 m/ 0.1016 m

= 0.094 m (3.7 in)

Fn = 1-Fb

= 1- 0.094 m

= 0.906 m (35.67 in)

Percent of thermal bridge = (Fb)*100

= (0.094 m) * 100

= 9.4%

Because the thermal bridge is 9.4% of the length of the façade, the skip-and-debridge needs to be calculated using the isothermal plane procedure. Note: The rest of the example will be in SI units only, with no IP unit translation

Kb = 160 W/m-K (conductivity of skipped debridge, in this case Aluminum)

Rt $= \sum$ (Depth/ conductivity)

$= D_d/k_d$

= (0.0086 m/0.024W/m-K)

= 0.35833 m^2-K/W

where Depth is length of thermal bridge in a direction of heat flow, and the air is assumed to have the conductivity of 0.024 W/m-K

Kn = total depth/Rt

= 0.0086m/ 0.35833 W/m-K

= 0.024W/m-K

Keff = Fb*Kb +Fn*Kn

= 0.094*160 W/m-K + 0.906* 0.024W/m-K

= 15.062 W/m-K

To convert to IP:

Keff = 15.062 W/m-K * 0.57782

= 8.703 Btu/hr-ft-^{o}F

or in alternative IP units,

Keff = 15.062* 0.57782 * 12 in/ft

= 104.436 Btu-in/hr-ft^2-^{o}F

Step-2

Replace the strip of air-aluminum-air with new keff material of 15.078 W/m-K

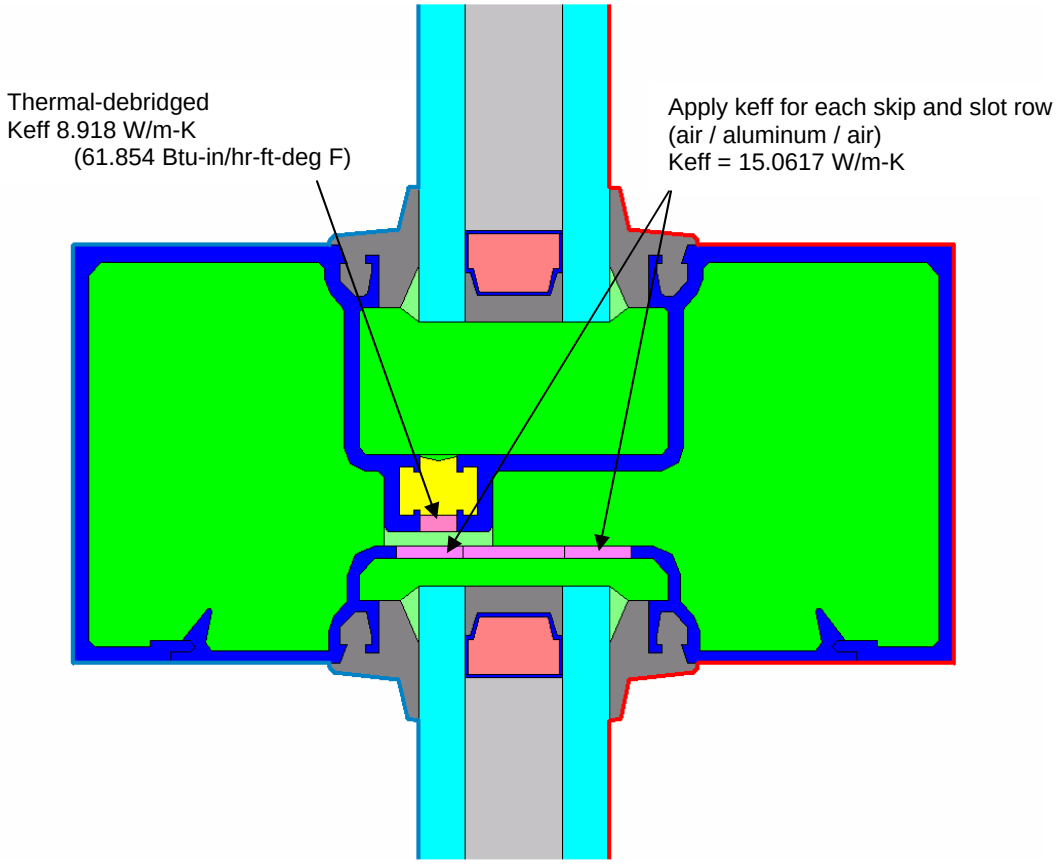

Figure 8-94. New Keff assigned to each skip and debridged row.

Step 3

Define the Boundary condition and run the model to calculate the U-factor for frame and edge-of-glass.

8.9.7. Example 3: Skip-and-debridge:

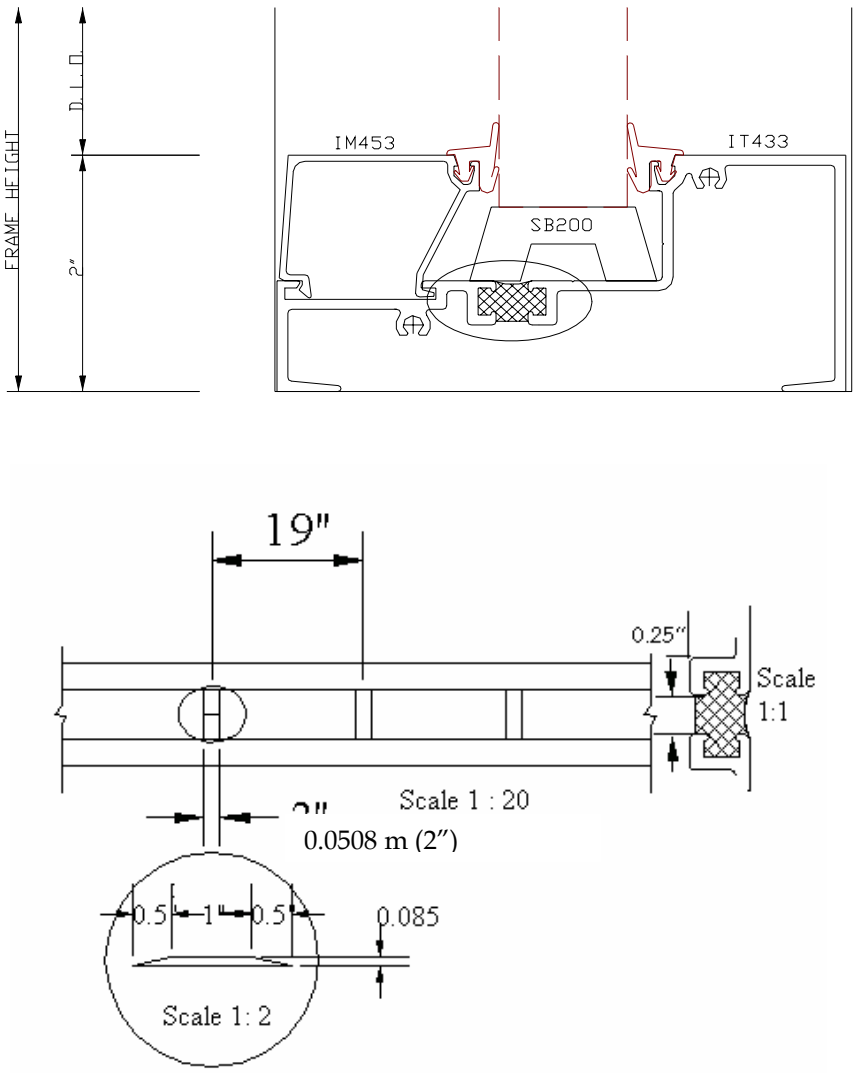

Note: the skip trapezoid shall be treated as a rectangle equal to the total length of the base of the trapezoid.

Figure 8-95. Drawings for Example 3 Skip and Debridge.

STEP 1

Skip = 0.0508 m (2 in)

Debridge (Air) = 0.4318 m (17 in)

Interval = 0.508 m (2 in) + 0.4318m (17 in) = 0.4826 m (19 in)

Note: The rest of the example will be in SI units only, with no IP unit translation

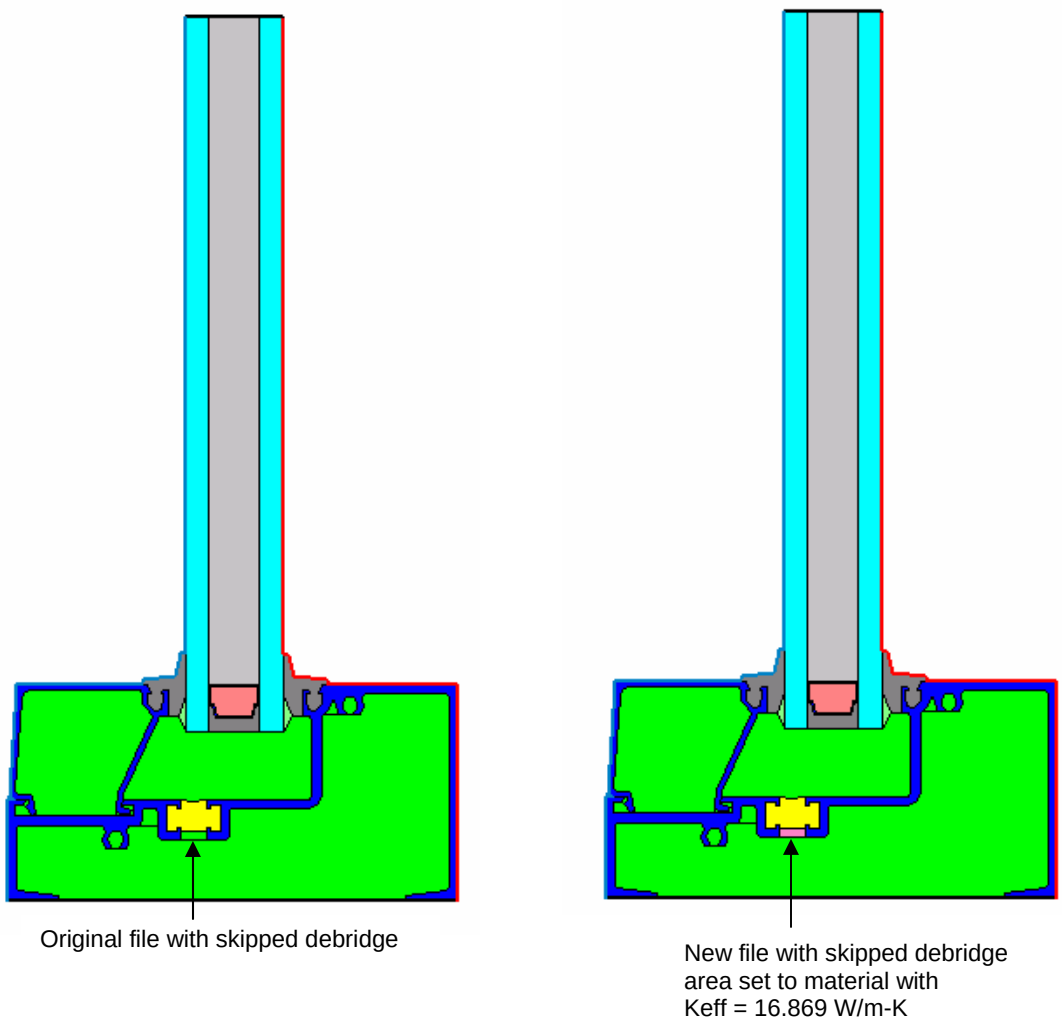

Figure 8-96. Original THERM model and new model with new Keff for skipped debridge area.

Fb = 0.0508 m/ 0.4826 m = 0.1053

Fn = 1-Fb
= 1- 0.1053 = 0.4947

%Fb = (Fb) ·100
= (0.1053) · 100
= 10.53% (Skip-and-debridge needs to be calculated using Isothermal plane procedure).

Kb = 160 W/m-K (conductivity of skipped debridge, in this case aluminum)

Rt = ∑ Length/ conductivity
= (0.00635 m/0.024 W/m-K)
= 0.2646 m^2-K/W

The length is the length of material in a direction of heat flow i.e. 0.25″ as shown in the figure. (The air effective conductivity calculated using THEM)

Kn = length/Rt
= 0.00635m/0.2646 m^2-K/W
= 0.024 W/m-K

Keff = Fb*Kb +Fn*Kn
= 0.1053*160 W/m-K + 0.8947*0.024 W/m-K
= 16.869 W/m-K

To convert to IP:

Keff = 16.869 * 0.57782 = 9.747 Btu/hr-ft-F (or in alternative IP Units: 116.97 Btu-in/hr-ft^2-F)

8.10 Site Built fenestration products (Curtain Walls, Window Walls and Sloped Glazing)

A few things to be aware of:

- review the drawings carefully for non-continuous elements. These systems tend to have many such elements including shear blocks, installation clips and spacers at the bolts.
- Site built modeling is partially dependent on the installation of the product. Make sure that the drawings you have show the installation.
- Site built products are typically multiple lite systems where the intermediate vertical and horizontal frame members repeat in some pattern.

8.10.1. Curtain Walls

NFRC defines a curtain wall as any building wall carrying no super imposed vertical load. A *curtain wall system* will typically be exterior to the building framework and will typically bypass the building floors.

NFRC 100 Table 4.3 states that curtain walls are simulated as two lites with one vertical mullion which are simulated and tested with intermediate vertical frames modeled as jambs and mullion, and intermediate horizontal frames modeled as head and sill. If the intermediate vertical and horizontals were simulated full width or height for the jambs, head and sill, the total area of the frame as simulated would be significantly larger than actual frames, so for rating purposes the head, sill and jamb are simulated as ½ the full height (head and sill) or width (Jambs). The mullion is simulated full width.

Curtain walls cannot be built or tested with ½ the full height or width head jambs and sill so when modeling the curtain wall head, sill, jambs and vertical mullion for testing purposes the full cross section and associated glazing systems are modeled

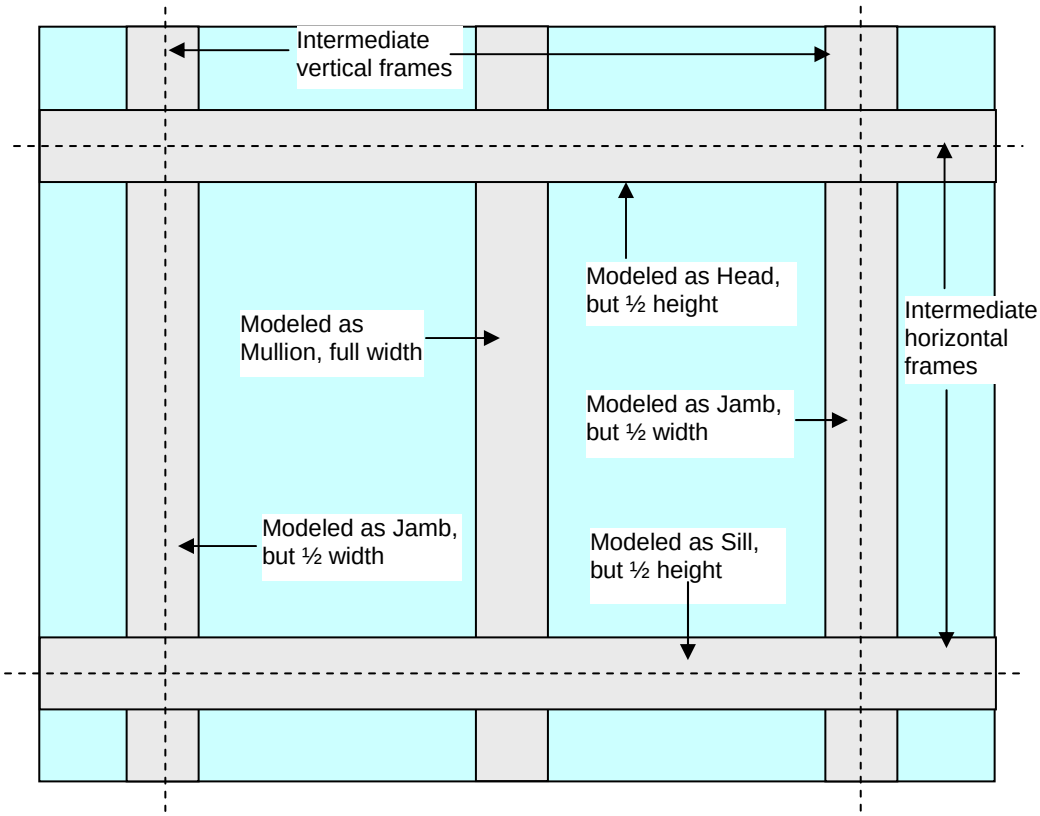

*Figure 8-97. Curtain wall simulation model (represented by dotted lines) for **rating**, where the framing members are modeled at half their width.*

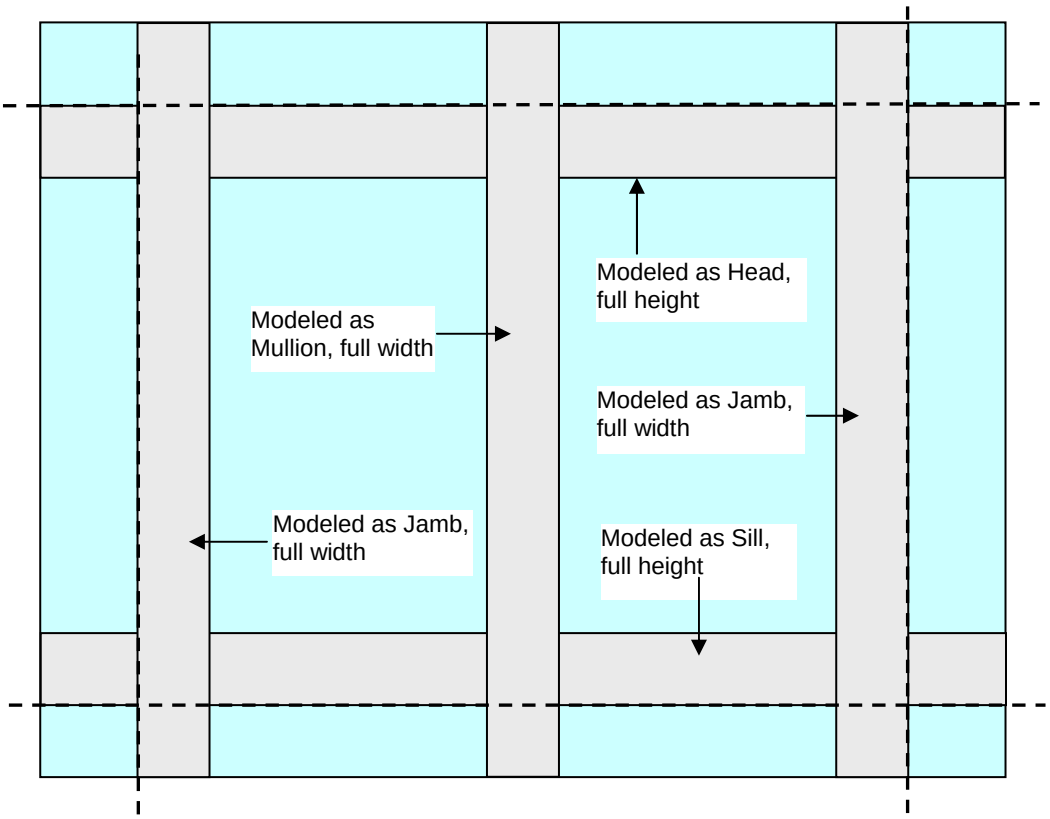

*Figure 8-98. Curtain wall simulation model (represented by dotted lines) to match **testing**.*

Steps in Modeling Curtain Walls for Rating Simulation

In WINDOW:

- Create glazing systems in WINDOW as usual, with Tilt set to “90".

In THERM:

- Draw the cross sections for curtain walls in the same manner as any other model in THERM – it will be a model similar to a meeting rail.

The following discussion lists the steps for making cross sections for intermediate horizontal and vertical frames. In the example, the horizontal frame and vertical frame are the same so only one drawing will be needed.

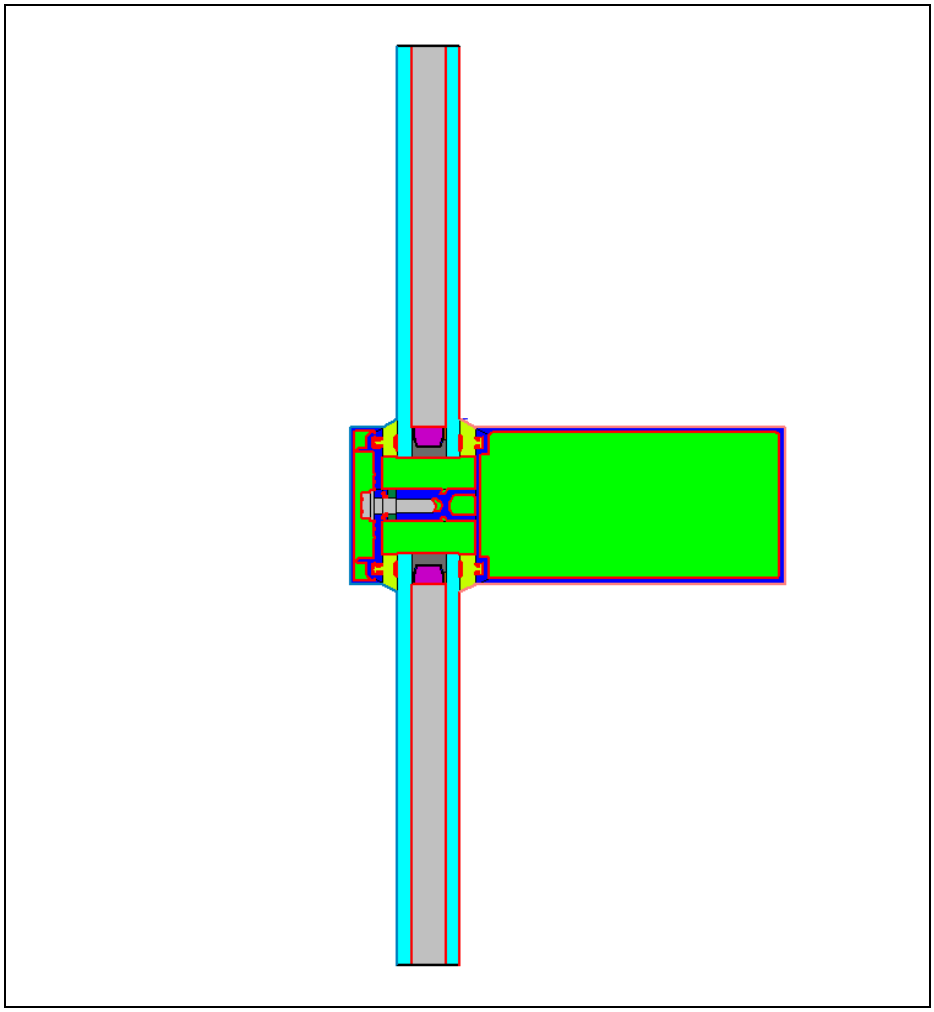

Figure 8-99. Curtain Wall Mullion Cross Section (mull.thm)

Modeling the Intermediate Vertical Mullion:

Using the dimensioned drawings or a DXF file, create the cross section for the frame portion of the vertical mullion. The figure below shows a THERM cross section of the frame portion of the vertical mullion.

Make sure that the section is oriented correctly with the glazing oriented up and down.

- If bolts are present make sure to model them as non-continuous thermal bridging elements if needed. (see section 8.9).
- Pay particular attention to the aluminum finish in order to assign the correct materials to the drawing. (Arrow to aluminum)

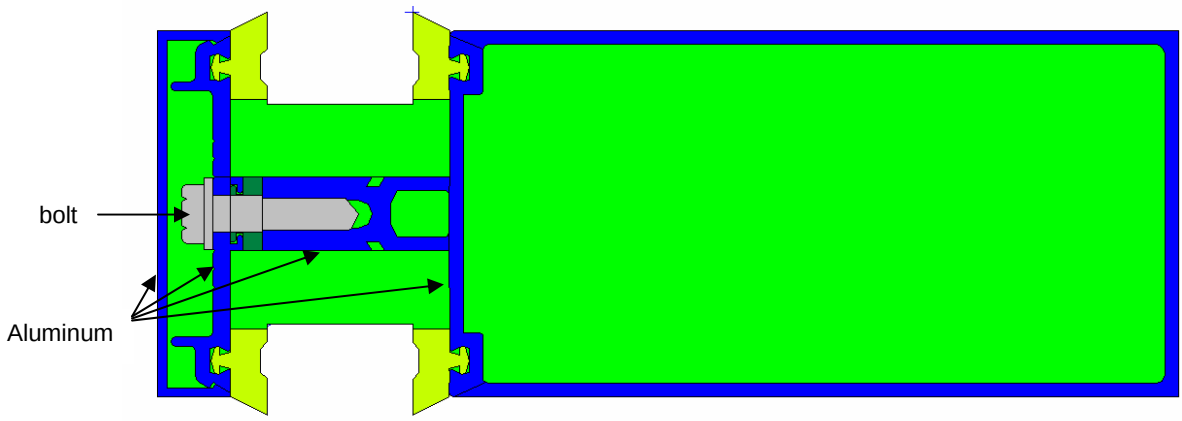

Figure 8-100. Mullion frame cross section without glass (Mull_noglass.thm)

This vertical cross section will be used for the vertical intermediate (mullion) and for the jambs. The jamb model it is necessary to determine and mark the ½ width point between the sight lines. The easiest way to do this is to make temporary reference rectangles as follows:

Determine Frame Midpoints

In order to model the "half-width" frame dimensions for the rating simulation, it is necessary to determine the mid-point of the frame, which is most easily done before the glazing systems are inserted.

- Draw a rectangle from the sight line (highest interior point) for both glazing systems, going horizontally in both directions, so that each rectangle is larger than the horizontal dimension of the frame.
- On both the right and left side of the frame draw a rectangle between the other two reference rectangles and make sure it contacts the frame.
- Measure the exterior rectangle just created in the vertical dimension. The midpoint of the frame is half of this dimension.
- For both the right and left sides of the frame cross section, select the vertical frame component and insert a point on the frame at the midpoint dimension.

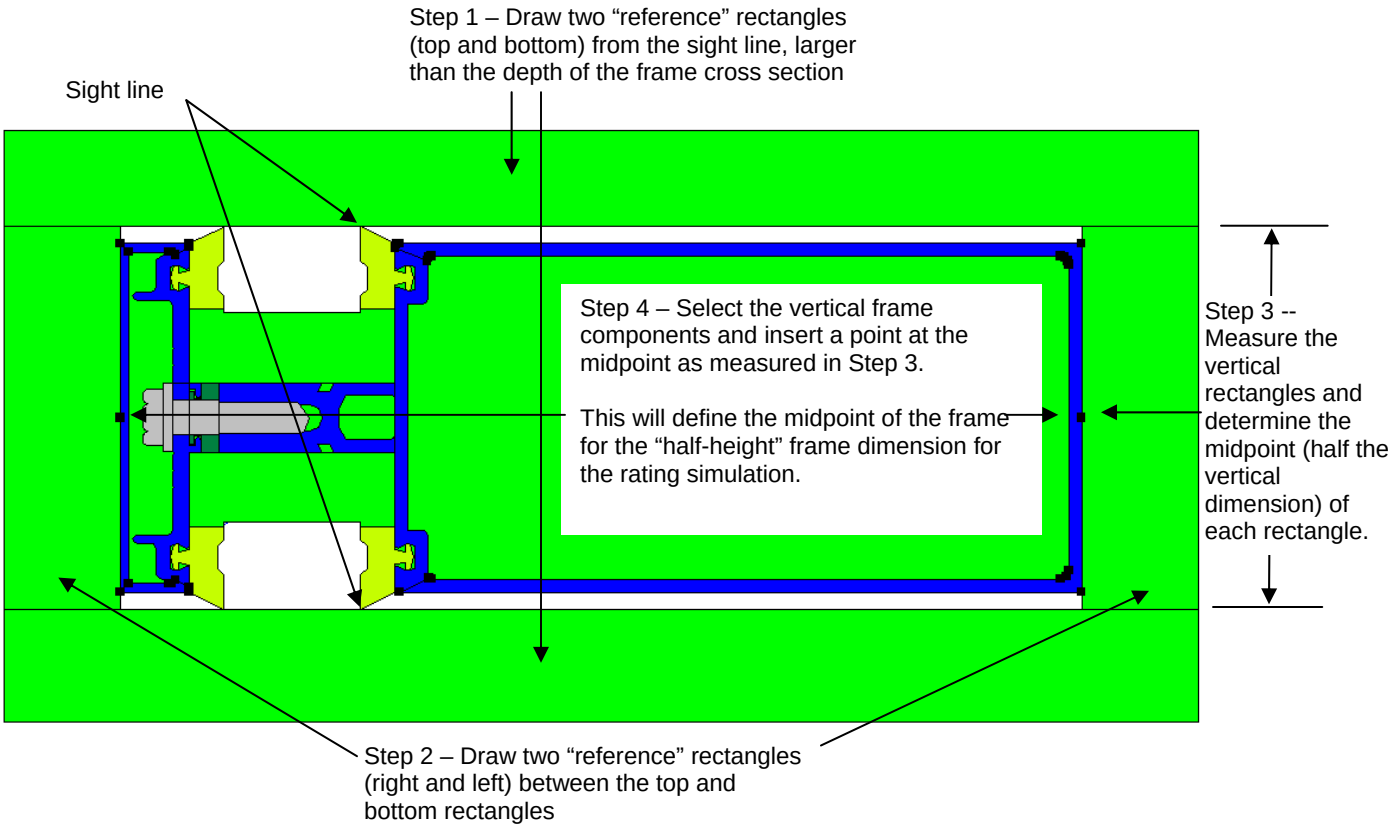

Figure 8-101. Determine the frame mid-points (mull_midpoint.thm)

Finish the cross section

- Delete the four "reference" rectangles.
- Insert the glazing and spacers as usual.
- In **Therm File Properties** (File/Properties), set the **Cross Section Type** to "Vertical Meeting Rail".
- Assign the **Boundary Conditions** as follows:
  - **Interior Frame:** For the mullion cross section, the entire frame width (not just half) is modeled, so all the interior frame boundary condition elements are assigned a **Boundary Condition** of "<frame type> Interior (Convection Only), and a **U-factor Surface** tag of "Frame".

- **Interior Glazing:** Set the **Boundary Conditions** for each glazing system to "<glazing system> U-factor Inside Film" and the **U-factor Surface** tag to "Edge" for the first 63.5 mm (2.5 inches) from the sight line, and "None" for the remainder of the glazing system.
- **Exterior Frame:** Set the **BoundaryCondition** to "NFRC 100 Exterior" and the **U-factor Surface** tag to "SHGC Exterior" for the exterior frame
- **Exterior Glazing:** Set the **BoundaryCondition** to "NFRC 100 Exterior" and the **U-factor Surface** tag to "None" for both exterior glazing systems.

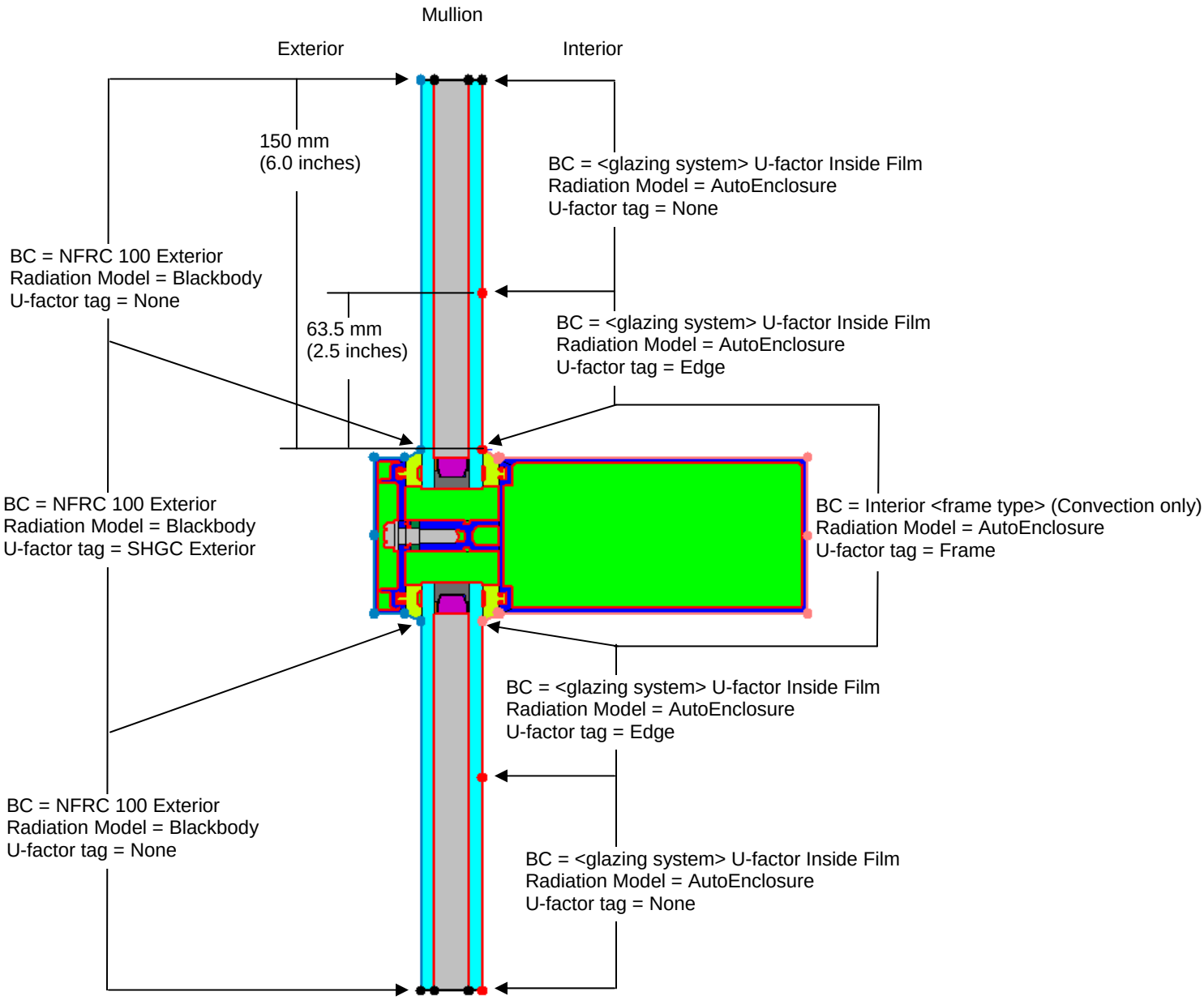

Figure 8-102. Curtain Wall Mullion Boundary Conditions (mull_boundary.thm)

Modeling Curtain wall Jambs:

In this example, the curtain wall jambs are modeled using the same drawing as the mullion. The boundary conditions are adjusted to capture the heat flow of only half the width. Since the sections may be asymmetrical, both the left and right portions of the mullion are required to be simulated as left and right jambs.

For the Right Jamb:

- Copy the vertical mullion drawing with boundary conditions assigned .
- In **Therm File Properties** (File/Properties), set the **Cross Section Type** to "Vertical Meeting Rail".
- Do not change the **Boundary Conditions** but assign new **U-factor Surface** tags as follows:
  - **Interior Frame:**
    - from the midpoint to the top sight line set the **U-factor Surface** tag to "Frame"
    - from midpoint to the bottom sight line and the entire bottom glass assign the **U-factor Surface** tag to "None".
    - **Interior Glazing System:** for the first 63.5 mm of the top glazing system set the **U-factor Surface** tag to "Edge", and the remainder of the glazing system to "None". For the entire bottom glass assign the **U-factor Surface** tag to "None".
  - **Exterior Frame:**
    - from the midpoint to the top sight line assign the **U-factor Surface** tag to "SHGC Exterior"
    - from midpoint to the bottom sight line assign the **U-factor Surface** tag to "None".
  - **Exterior Glazing System:** set the **U-factor Surface** to "None".

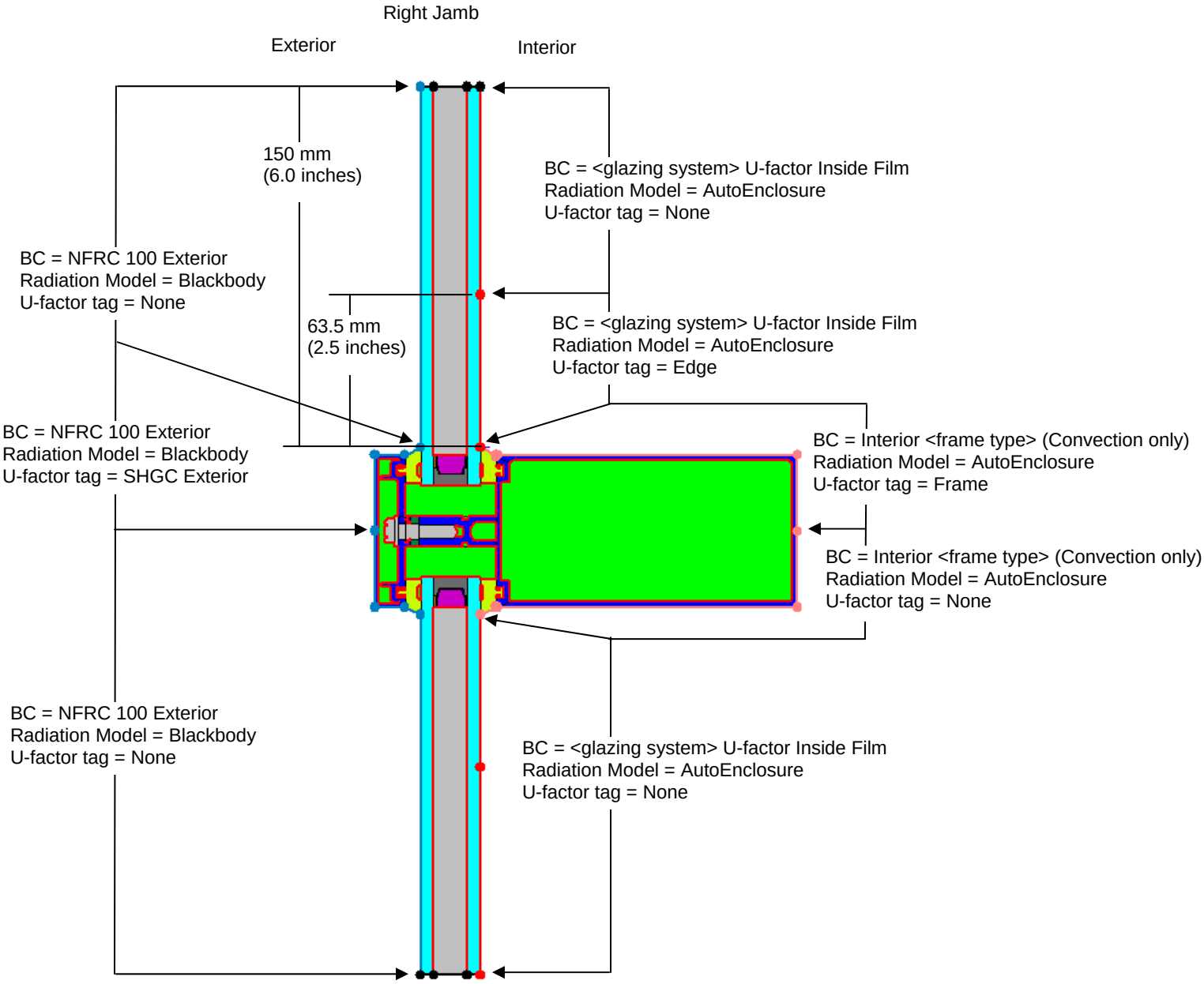

Figure 8-103. Right Jamb Boundary conditions (rightjamb_boundary.thm).

For the Left Jamb:

- The process is the same as the right jamb except that the Frame, edge and SHGC Exterior tags are assigned to the bottom half of the drawing and the top half is assigned the tag of "none"

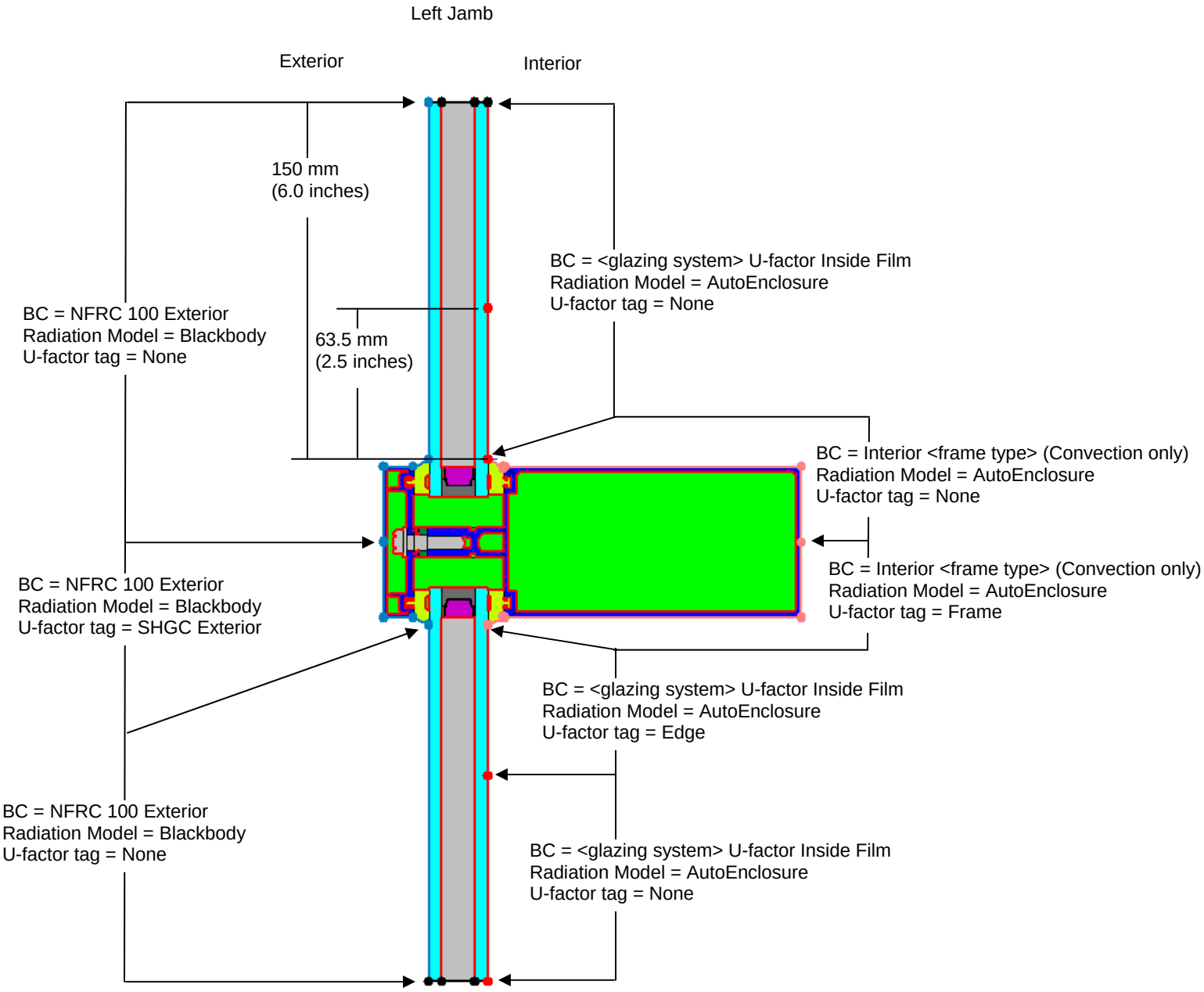

Figure 8-104. Left Jamb Boundary Conditions (leftjamb_boundary.thm)

NOTE: the Therm File option " Use CR Model for Window Glazing System" may be left checked since Therm will not calculate Condensation resistance for a cross section Type tagged Vertical Meeting Rail or Jamb.

Modeling the Intermediate Horizontal (as Head and Sill):

The horizontal frame cross section is drawn in exactly the same way as the intermediate vertical frame cross section, including inserting the midpoint. For this example the horizontal and vertical frames are identical so the same drawing is used. Assign boundary conditions in the usual way and then assign new boundary condition U-Factor Surface tags as follows for the head and sill.

For the Head:

- Use the drawing for the intermediate horizontal.
- In **Therm File Properties** (File/Properties), set the **Cross Section Type** to "Head".
- Assign the Boundary Conditions as follows:
  - **Interior Frame:**
    - For the interior frame from the midpoint to the *bottom* sight line, set the **Boundary Condition** to "<frame type> Interior (Convection Only), and the **U-factor Surface** tag to "Frame".
    - For the interior frame from midpoint to the *top* sight line, set the **Boundary Condition** to "<frame type> Interior (Convection Only), and the **U-factor Surface** tag to "None".
  - **Interior Glazing:** Set the **Boundary Conditions** for each glazing system of the bottom of the glass to "<glazing system> U-factor Inside Film" and the **U-factor Surface** tag to "Edge" for the first 63.5 mm (2.5 inches) from the sight line, and "None" for the remainder of the glazing system.
  - **Exterior Frame:**
    - For the exterior frame from the midpoint to the *bottom* sight line, set the **BoundaryCondition** to "NFRC 100 Exterior" and the **U-factor Surface** tag to "SHGC Exterior".
    - For the exterior frame from the midpoint to the *top* sight line, set the **BoundaryCondition** to "NFRC 100 Exterior" and the **U-factor Surface** tag to "None".
  - **Exterior Glazing:** Set the **BoundaryCondition** to "NFRC 100 Exterior" and the **U-factor Surface** tag to "None" for both exterior glazing systems.

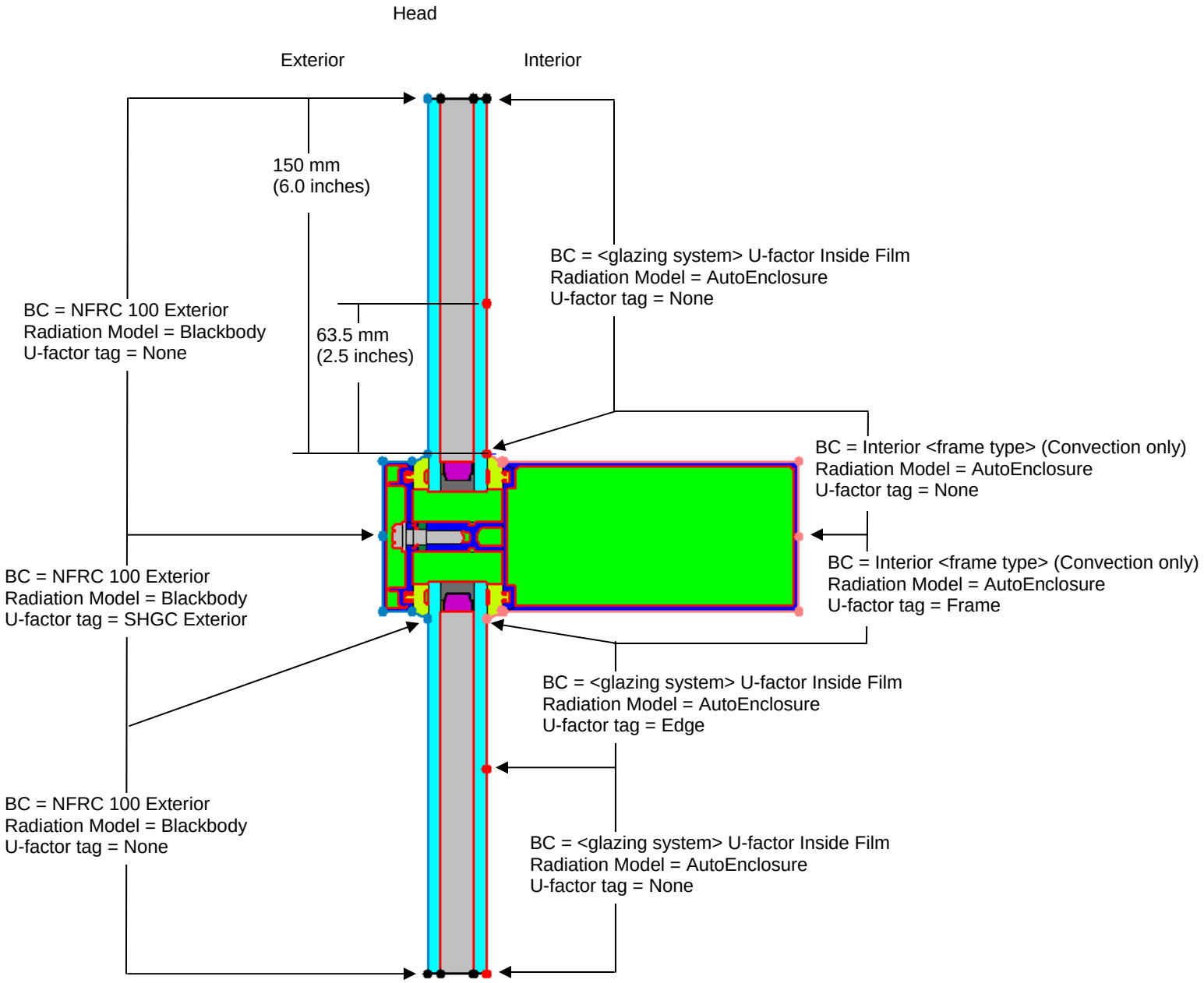

Figure 8-105. Head Boundary Conditions (head_boundary.thm)

For the Sill:

- Use the drawing for the intermediate horizontal.
- In **Therm File Properties** (File/Properties), set the **Cross Section Type** to "Sill".
- Assign the Boundary Conditions as follows:
  - **Interior Frame:**
    - For the interior frame from the midpoint to the *top* sight line, set the **Boundary Condition** to "<frame type> Interior (Convection Only), and the **U-factor Surface** tag to "Frame".
    - For the interior frame from midpoint to the *bottom* sight line, set the **Boundary Condition** to "<frame type> Interior (Convection Only), and the **U-factor Surface** tag to "None".
  - **Interior Glazing:** Set the **Boundary Conditions** for each glazing system of the *top* of the glass to "<glazing system> U-factor Inside Film" and the **U-factor Surface** tag to "Edge" for the first 63.5 mm (2.5 inches) from the sight line, and "None" for the remainder of the glazing system.
  - **Exterior Frame:**
    - For the exterior frame from the midpoint to the *top* sight line, set the **BoundaryCondition** to "NFRC 100 Exterior" and the **U-factor Surface** tag to "SHGC Exterior".
    - For the exterior frame from the midpoint to the *bottom* sight line, set the **BoundaryCondition** to "NFRC 100 Exterior" and the **U-factor Surface** tag to "None".
  - **Exterior Glazing:** Set the **BoundaryCondition** to "NFRC 100 Exterior" and the **U-factor Surface** tag to "None" for both exterior glazing systems.

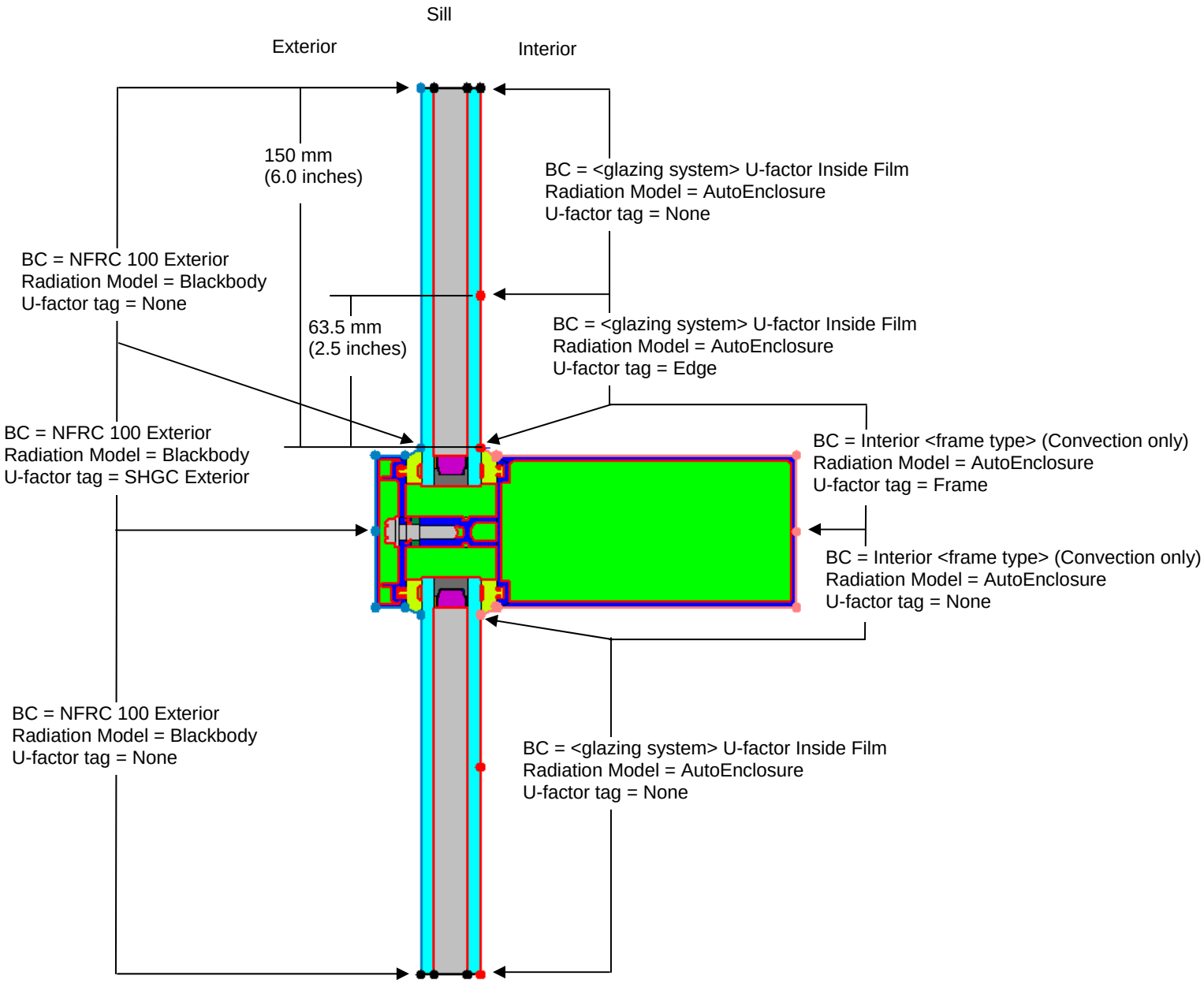

Figure 8-106. Sill Boundary conditions(sill_boundary.thm)

It is a good idea at this point to verify the orientation and the direction of the gravity arrows of these sections.

In WINDOW:

Calculate these files and import into WINDOW. Use the files to create the whole product in the Window Library as applicable.